Michigan State University CCU (Control and Concentrator Unit)
Information for Safety Review for LAPD.

Introduction

The MSU Control and Concentrator Unit (CCU) is a 48-channel device to control scintillation counters using the Hamamatsu H5783 photomultiplier module coupled with the MSU Photomultiplier-tube Amplifier and Discriminator (PAD). This system was used previously to control 144 TSU counters and approximately 500 other counters in the CDF-Run-II detector. A publication "Gain and Threshold Control of Scintillation Counters in the CDF Muon Upgrade for Run II, C. Bromberg in Proceedings of the APS DPF conference DPF2000, Columbus, Ohio, Aug. 2000, gives a general description of the MSU trigger counter system that has been installed in PC4 around the LAPD cryostat. There are 48 TSU counters being controlled by one CCU.

For details of the electronics, the schematics for both the CCU and PAD circuits are attached to this document. Each CCU module has 4 internal commercial power supplies, which are fused at their inputs (-11V, +15V, +5V, -7V) and have on board over-current protection on the outputs.

During deployment at CDF it was shown that the distributed DC powered counters are fused or have some other current limiting feature to prevent any short circuit on the counters from causing a fire. On a Cat5 cable (AWG bare copper conductors rated at 0.3A) to each TSU counter, the CCU distributes digital control and counter signals as well as ground and two DC voltages, +12V and –5V. Schematic pages 14-16 show the +12V supplied by a regulator (LM78L12ACM), while the -5V (–VIN) supplied by a regulator (LM79L05ACM). The data sheet for the regulators list as features:

* Output current of 100 mA
* Internal thermal overload protection
* Output transistor safe area protection
* Internal short circuit current limit

Both regulators, with a maximum output current of 0.1A and thermal overload protection, as well as the Cat5e cable don't pose fire hazards in the CCU or at the PAD circuits in each counter. The sealed H5783 photomultiplier module generates internally its photomultiplier HV from the +12V supply and therefore the high voltage poses no safety hazard. Also, as shown in the published document, the counters are completely encased in a 20-mil thick aluminum shell, which prevents direct ignition by an external flame.

The next section contains a dialog describing the CCU and PAD schematics, and power supply circuitry and ratings.

Dialog to accompany CCU schematics pdf file.

Each CCU contains two PC boards, one on top of the other, each of which controls 24 PADs

| Pages | |
|---|---|
| 1-10 | Digital RS232 communication for the 24 PADs setting the internally generated PMT HV and discriminator threshold, including sensing of PAD current to initiate download. Also, DC filter capacitors for -5.2V (page 7) |
| 11-13 | Front panel RJ45 connector (24 per board) with 8 wires: PD+: +12V; PD–: –5V power; PS, CLK , SD, are RS232 lines to PADs, CH+/–: ECL signal pair from PAD; GND: ground. |
| 14-16 | Power supply regulators, one for each of 24 PADs, two voltages +12V and -5V. |
| 17-20 | PAD ECL signals are received, converted to TTL, stretched to 60 ns, reconverted to ECL and output to one 25 pin pair connector for each board. |
| 21 | PAD circuit board schematic |
| 22 | Programming interface and Data Download for the CCU Single Board Computer. |
| 23 | –2V supply circuitry (See below) |

Power supplies (note from Barry Tigner, MSU designer of the CCU):

The -2V power supply is powered from a -5V 8A supply with a built-in current limit. It uses a linear adjustable regulator with a transistor current booster. The linear regulator has current and thermal limiting built in. If remember correctly we needed 3A at -2V (for ECL bias voltages), however there was no TO-220 adjustable part available at that current. Here is how the circuit works.

For currents under 700mA, the linear regulator supplies the current. When the current starts going above that, the power transistor starts to conduct to supply the additional current. The -2V regulator circuit has (2) 1 ohm 5 watt wire wound resistors.

The other power supplies are designed with built-in current limits. We checked and adjusted the DC voltages.

| | |
|---|---|
| +5V @ 3A | powers the SBC and both CCU boards (TTL and ECL). |
| –5V @ 8A | Power both CCU boards (ECL), and the -2Vregulator. |
| +15V @ 3A | (adjusted to +14.5) supplies power to the +12V PAD regulators which are current limited devices. |
| –15V @ 3A | (adjusted to –11.5) supplies power to the -5V PAD regulators which are current limited devices. |

The DC power traces on the CCU boards should be 0.05 inch wide 2 Oz copper. All the signal traces should be 0.01 or possibly 0.016 traces.

**The DC wiring used 20 or 22 AWG wires.**
The max currents used by each CCU board depends on how many PADs are connected.
Pads draw +12V@30mA with the PMT running, and –5V@5mA.
A single board supplying 24 PADs would therefore draw 720mA @12V and 120mA @-5V.
In a CCU with both boards supplying 24 PADs, these currents are doubled.

For any further safety issues, please contact C. Bromberg, Prof. of Physics, Michigan State University, East Lansing, MI 48824, Email (bromberg@pa.msu.edu), or telephone (616 481 3533)

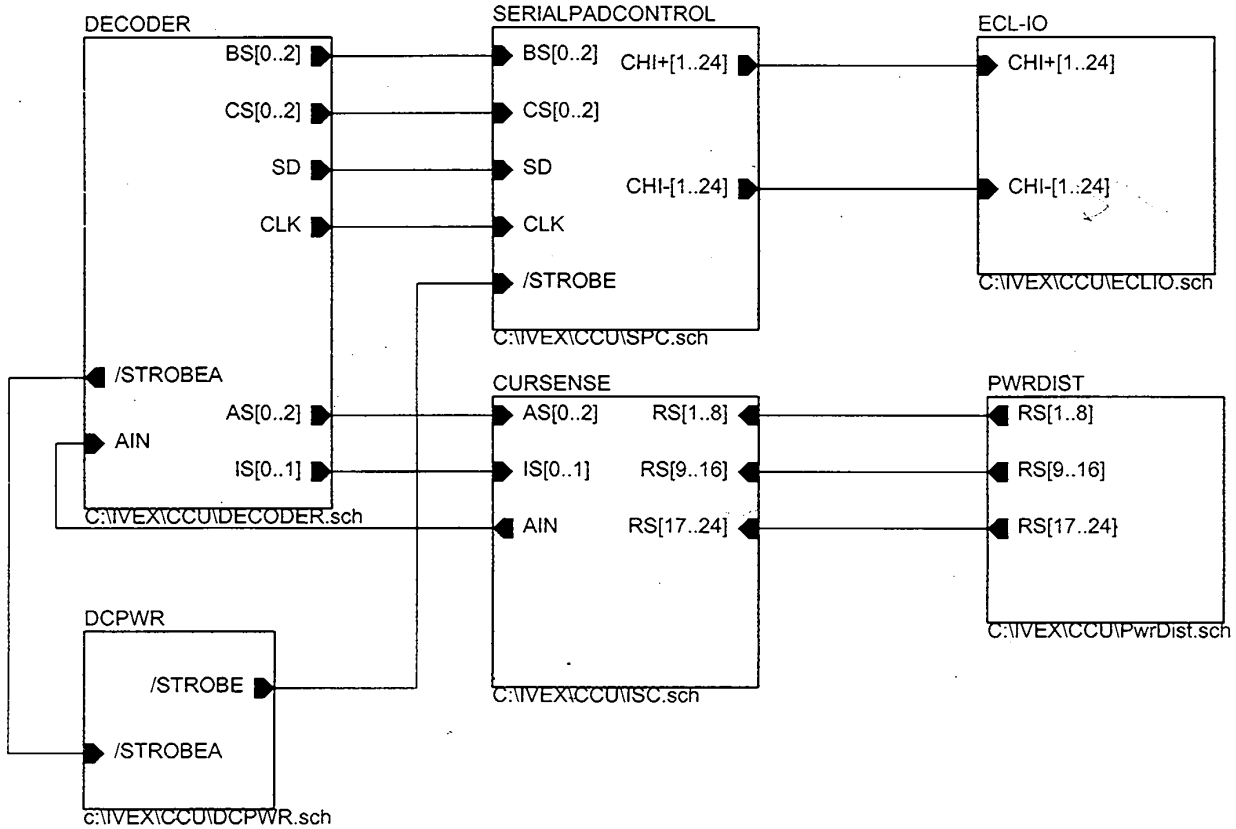


CCU SCHEMATIC
25 July, 2000

Susie pumpkin

R 530 757 4615X

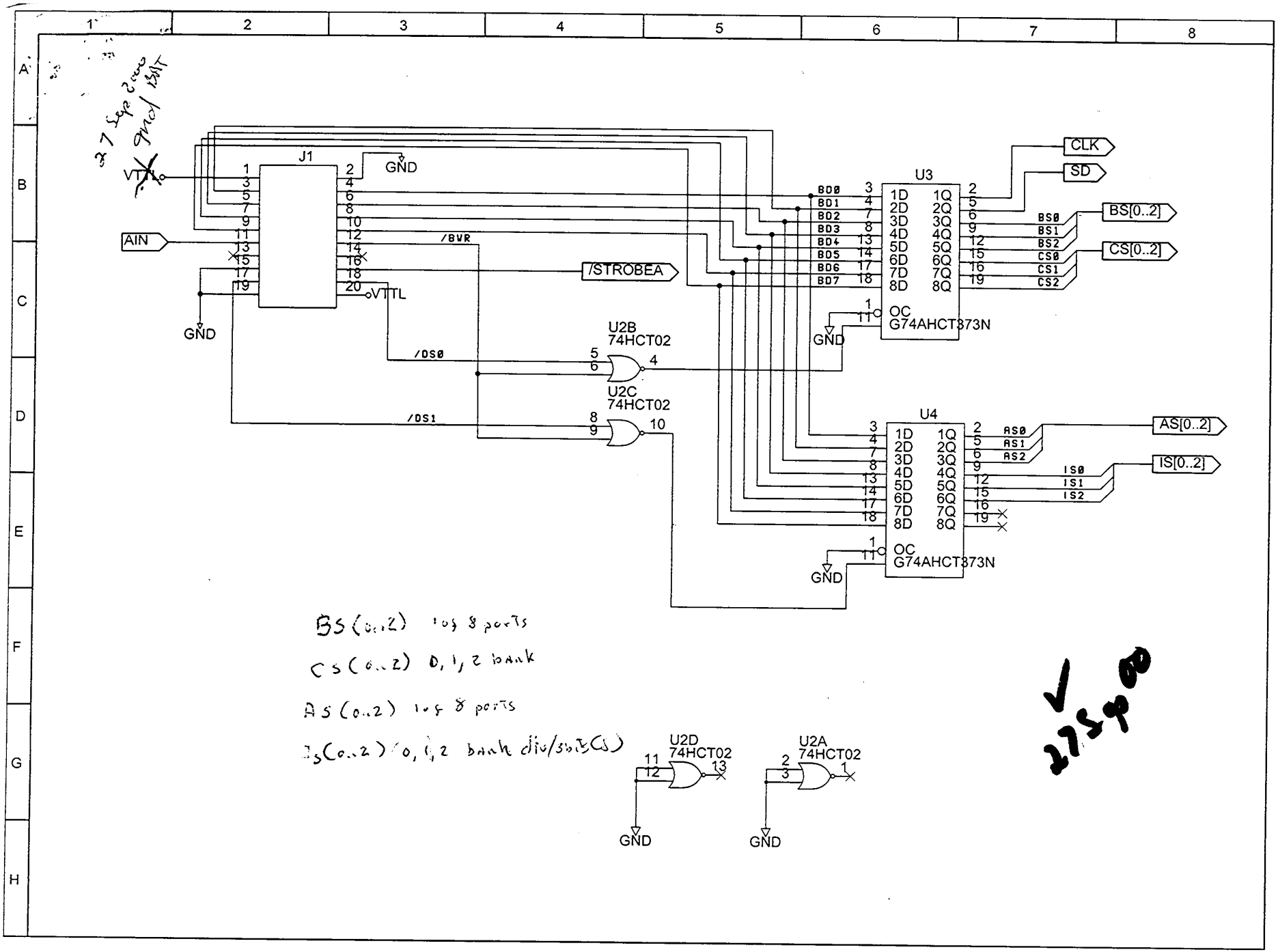


BS (0..2) 1 of 8 ports

CS (0..2) 0, 1, 2 bank

AS (0..2) 1 of 8 ports

IS (0..2) 0, 1, 2 bank div/3bits(S)

27 Sep 2000 gnd BAT

27 Sep 00

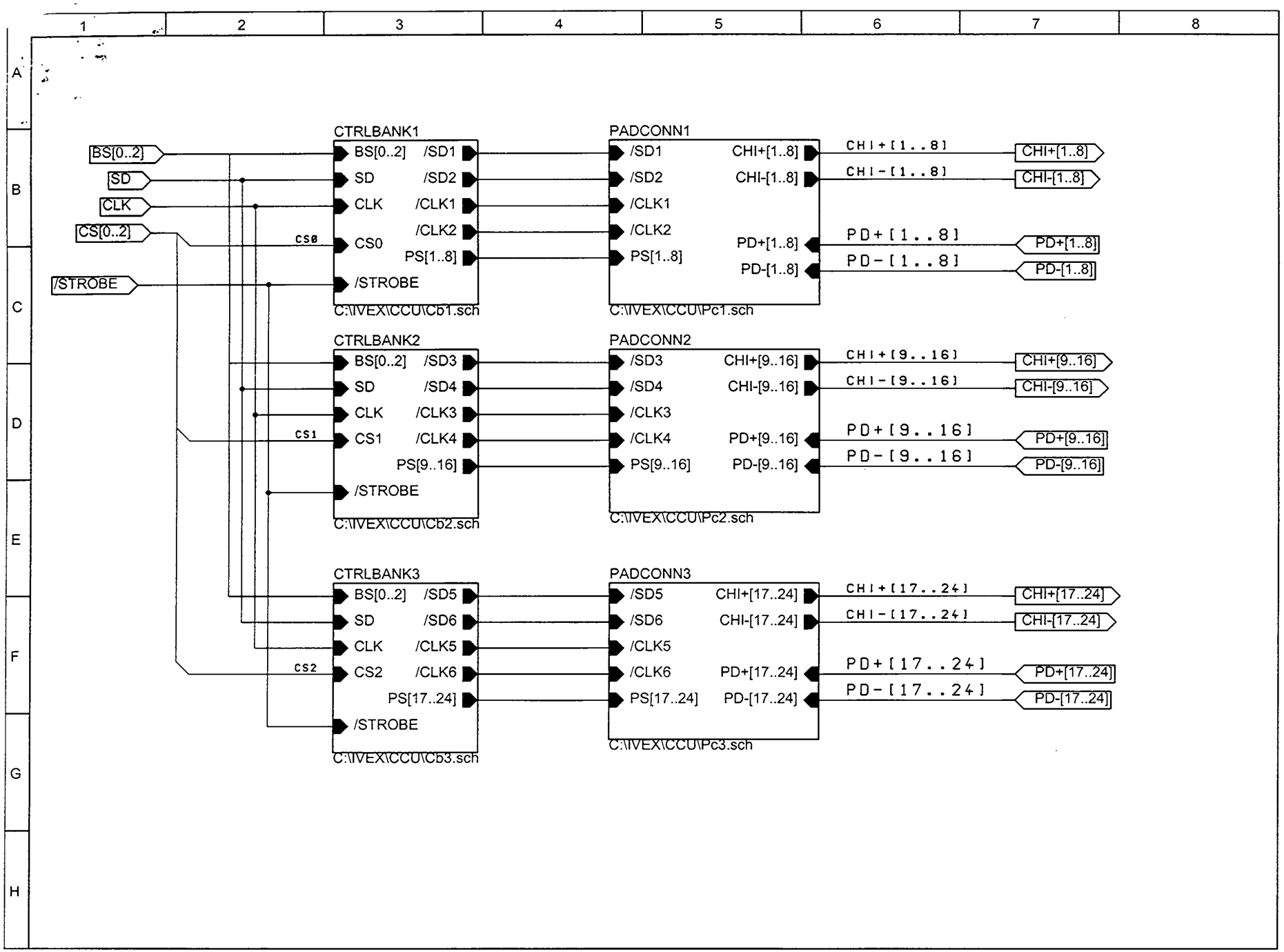
CTRLBANK1
BS[0..2]
SD
CLK
CS0
PS[1..8]
/STROBE
/SD1
/SD2
/CLK1
/CLK2
C:\IVEX\CCU\Cb1.sch
PADCONN1
CHI+[1..8]
CHI-[1..8]
PD+[1..8]
PD-[1..8]
C:\IVEX\CCU\Pc1.sch
CTRLBANK2
CS1
PS[9..16]
/SD3
/SD4
/CLK3
/CLK4
C:\IVEX\CCU\Cb2.sch
PADCONN2
CHI+[9..16]
CHI-[9..16]
PD+[9..16]
PD-[9..16]
C:\IVEX\CCU\Pc2.sch
CTRLBANK3
CS2
PS[17..24]
/SD5
/SD6
/CLK5
/CLK6
C:\IVEX\CCU\Cb3.sch
PADCONN3
CHI+[17..24]
CHI-[17..24]
PD+[17..24]
PD-[17..24]
C:\IVEX\CCU\Pc3.sch
BS[0..2]
SD
CLK
CS[0..2]
/STROBE
CHI+[1..8]
CHI-[1..8]
PD+[1..8]
PD-[1..8]
CHI+[9..16]
CHI-[9..16]
PD+[9..16]
PD-[9..16]
CHI+[17..24]
CHI-[17..24]
PD+[17..24]
PD-[17..24]

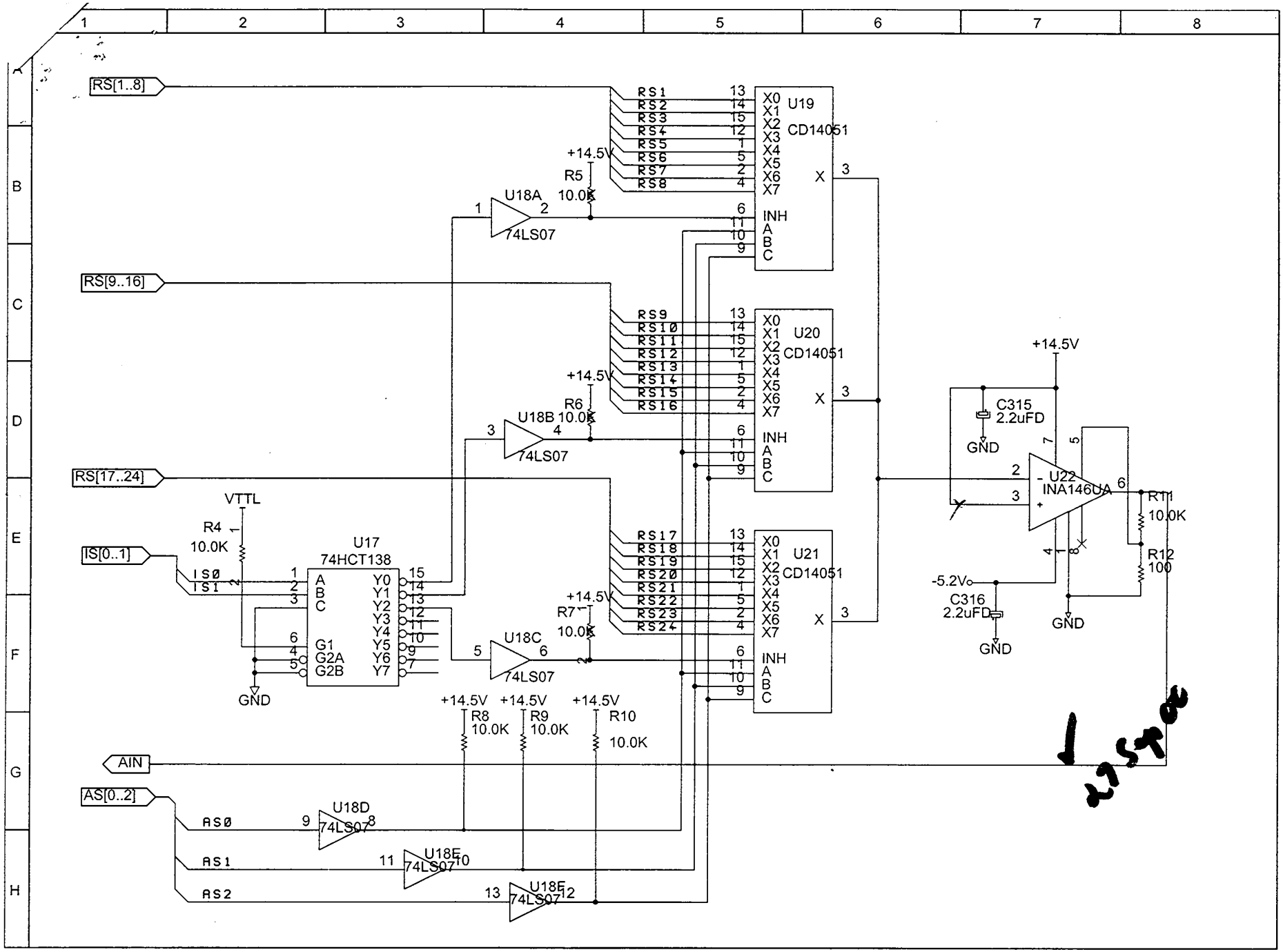
RS[1..8]
RS[9..16]
RS[17..24]
IS[0..1]
AIN
AS[0..2]
U19
CD14051
U20
CD14051
U21
CD14051
U18A
74LS07
U18B
74LS07
U18C
74LS07
U18D
74LS07
U18E
74LS07
U18E
74LS07
U17
74HCT138
VTTL
R4
10.0K
R5
10.0K
R6
10.0K
R7
10.0K
R8
10.0K
R9
10.0K
R10
10.0K
+14.5V
GND
C315
2.2uFD
C316
2.2uFD
-5.2V
U22
INA146UA
R11
10.0K
R12
100

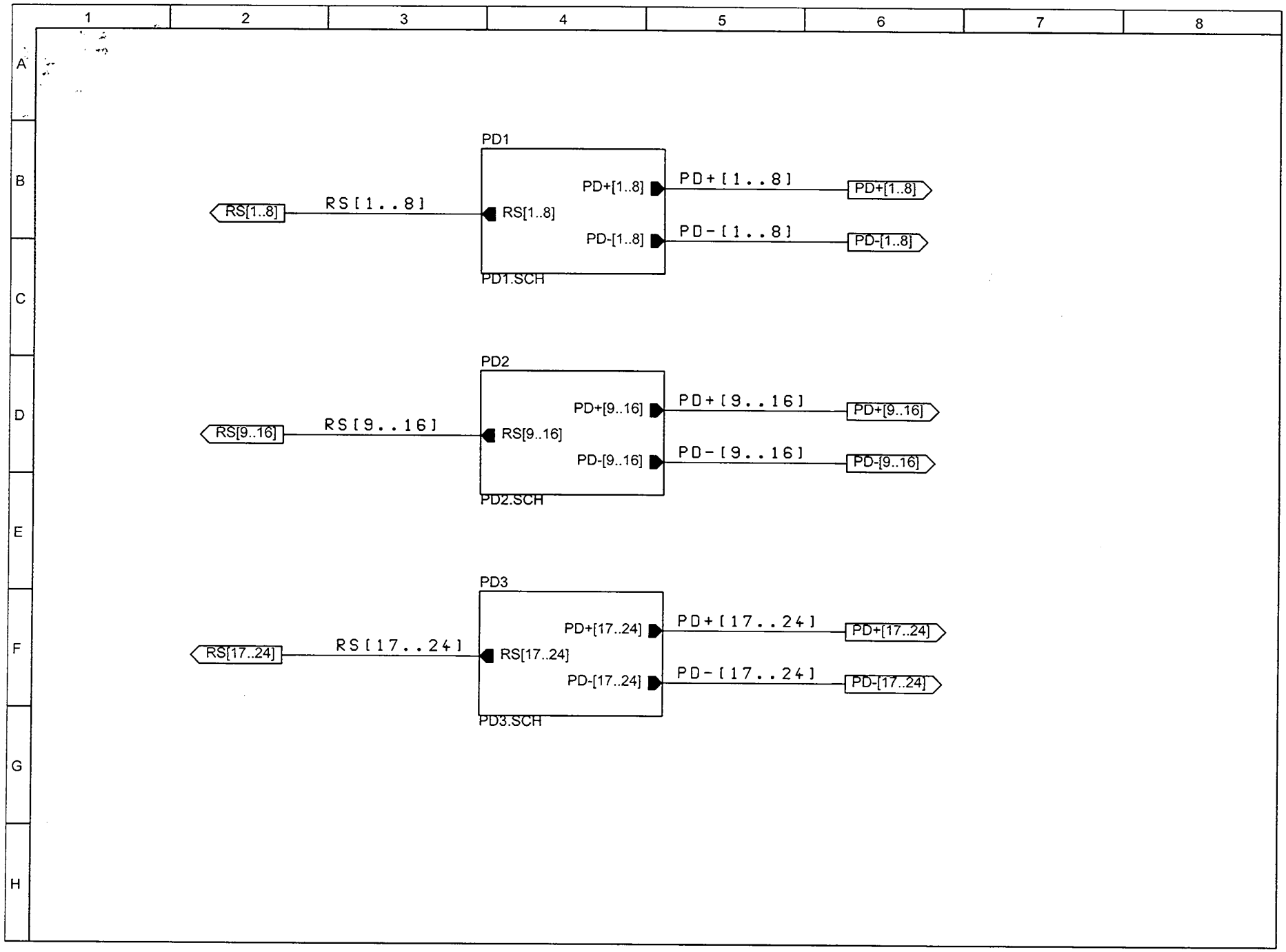
PD1
RS[1..8]
RS[1..8]
RS[1..8]
PD+[1..8]
PD-[1..8]
PD+[1..8]
PD-[1..8]
PD1.SCH
PD2
RS[9..16]
RS[9..16]
RS[9..16]
PD+[9..16]
PD-[9..16]
PD+[9..16]
PD-[9..16]
PD2.SCH
PD3
RS[17..24]
RS[17..24]
RS[17..24]
PD+[17..24]
PD-[17..24]
PD+[17..24]
PD-[17..24]
PD3.SCH

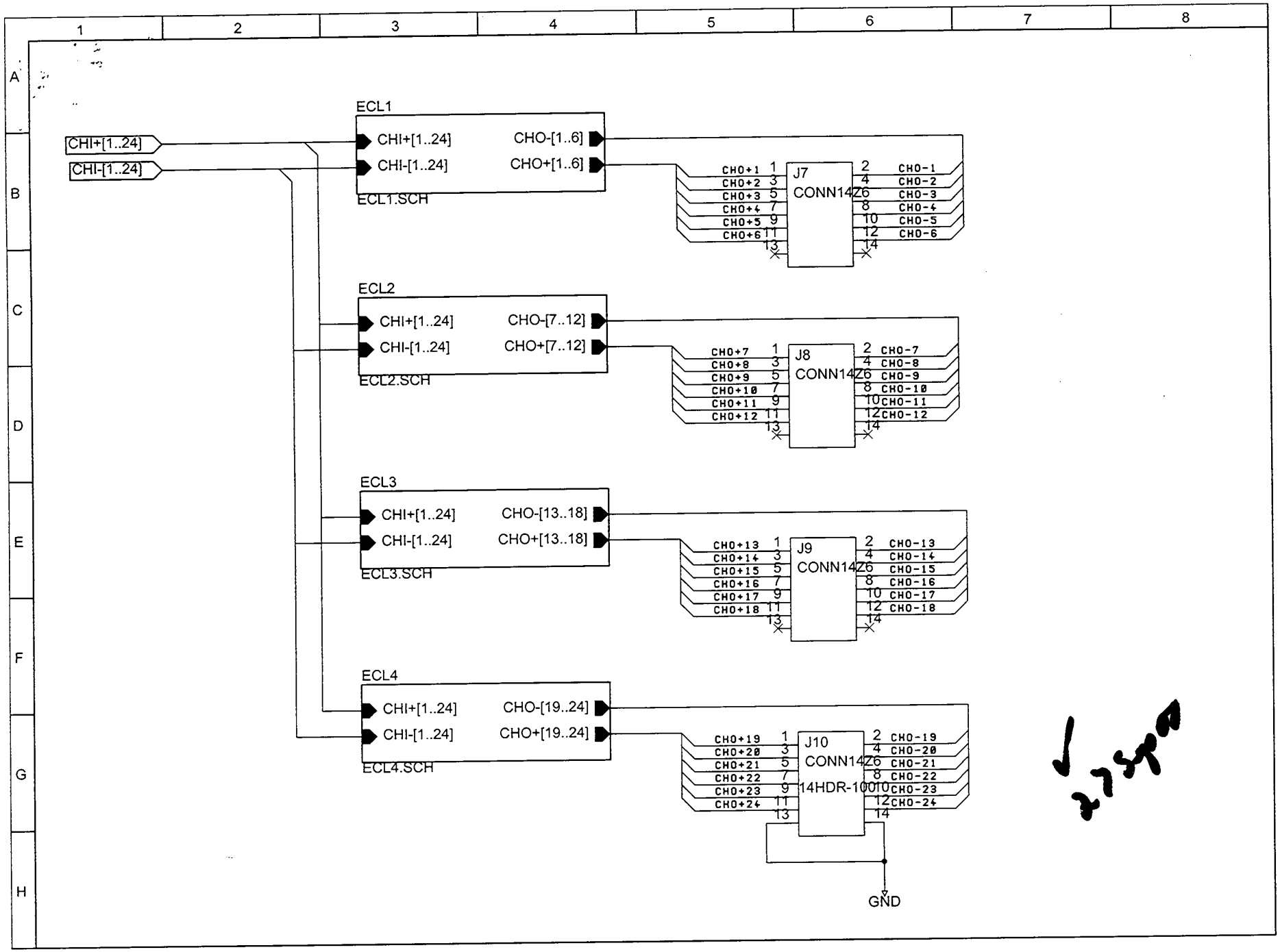
CHI+[1..24]
CHI-[1..24]
ECL1
CHI+[1..24]
CHI-[1..24]
CHO-[1..6]
CHO+[1..6]
ECL1.SCH
J7
CONN14Z6
CHO+1 CHO+2 CHO+3 CHO+4 CHO+5 CHO+6
CHO-1 CHO-2 CHO-3 CHO-4 CHO-5 CHO-6
ECL2
CHI+[1..24]
CHI-[1..24]
CHO-[7..12]
CHO+[7..12]
ECL2.SCH
J8
CONN14Z6
CHO+7 CHO+8 CHO+9 CHO+10 CHO+11 CHO+12
CHO-7 CHO-8 CHO-9 CHO-10 CHO-11 CHO-12
ECL3
CHI+[1..24]
CHI-[1..24]
CHO-[13..18]
CHO+[13..18]
ECL3.SCH
J9
CONN14Z6
CHO+13 CHO+14 CHO+15 CHO+16 CHO+17 CHO+18
CHO-13 CHO-14 CHO-15 CHO-16 CHO-17 CHO-18
ECL4
CHI+[1..24]
CHI-[1..24]
CHO-[19..24]
CHO+[19..24]
ECL4.SCH
J10
CONN14Z6
14HDR-100
CHO+19 CHO+20 CHO+21 CHO+22 CHO+23 CHO+24
CHO-19 CHO-20 CHO-21 CHO-22 CHO-23 CHO-24
GND

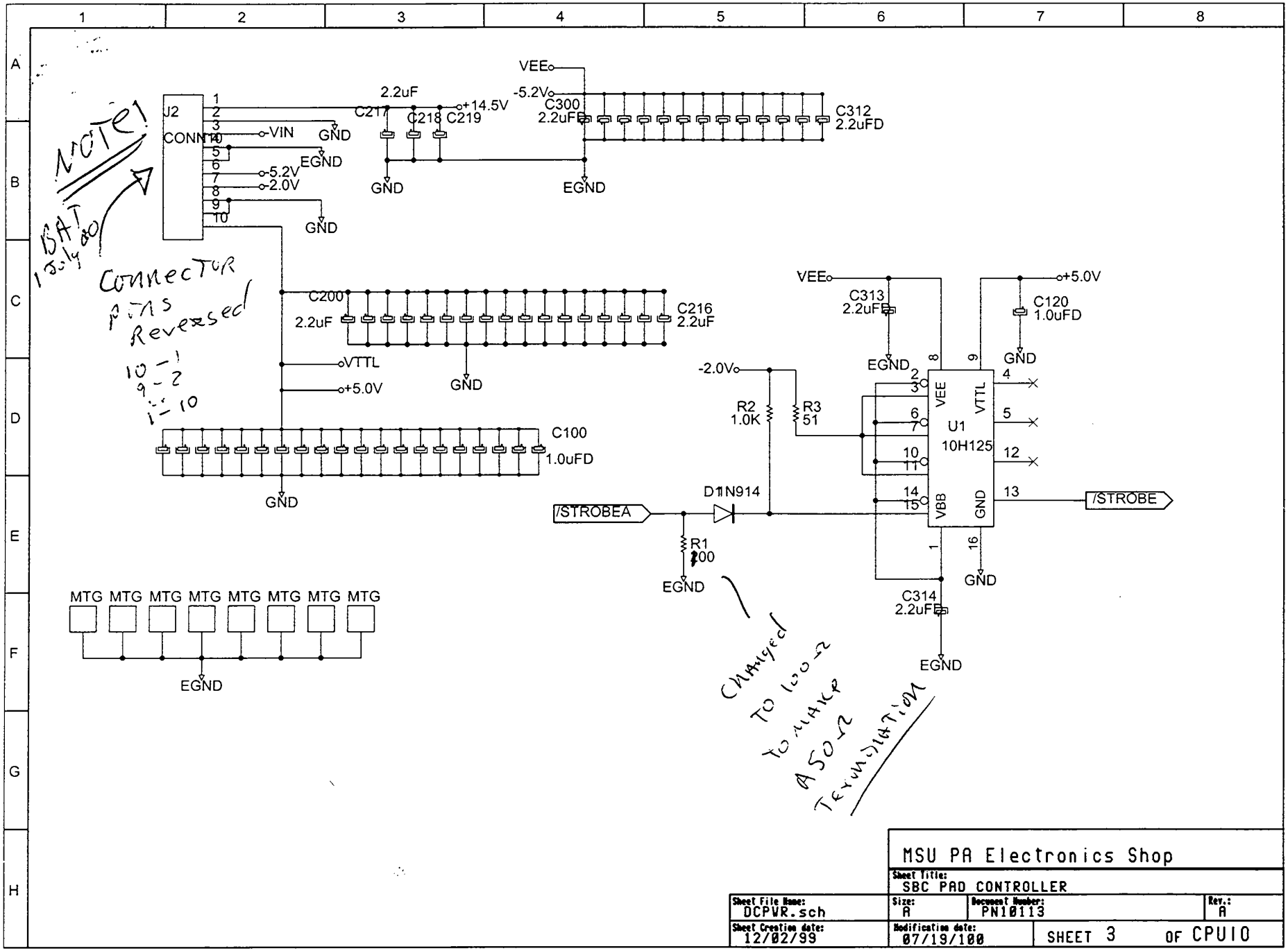


MSU PA Electronics Shop

| | | | |
|---|---|---|---|
| Sheet Title: SBC PAD CONTROLLER | | | |
| Sheet File Name: DCPWR.sch | Size: A | Document Number: PN10113 | Rev.: A |
| Sheet Creation date: 12/02/99 | Modification date: 07/19/100 | SHEET 3 | OF CPUIO |

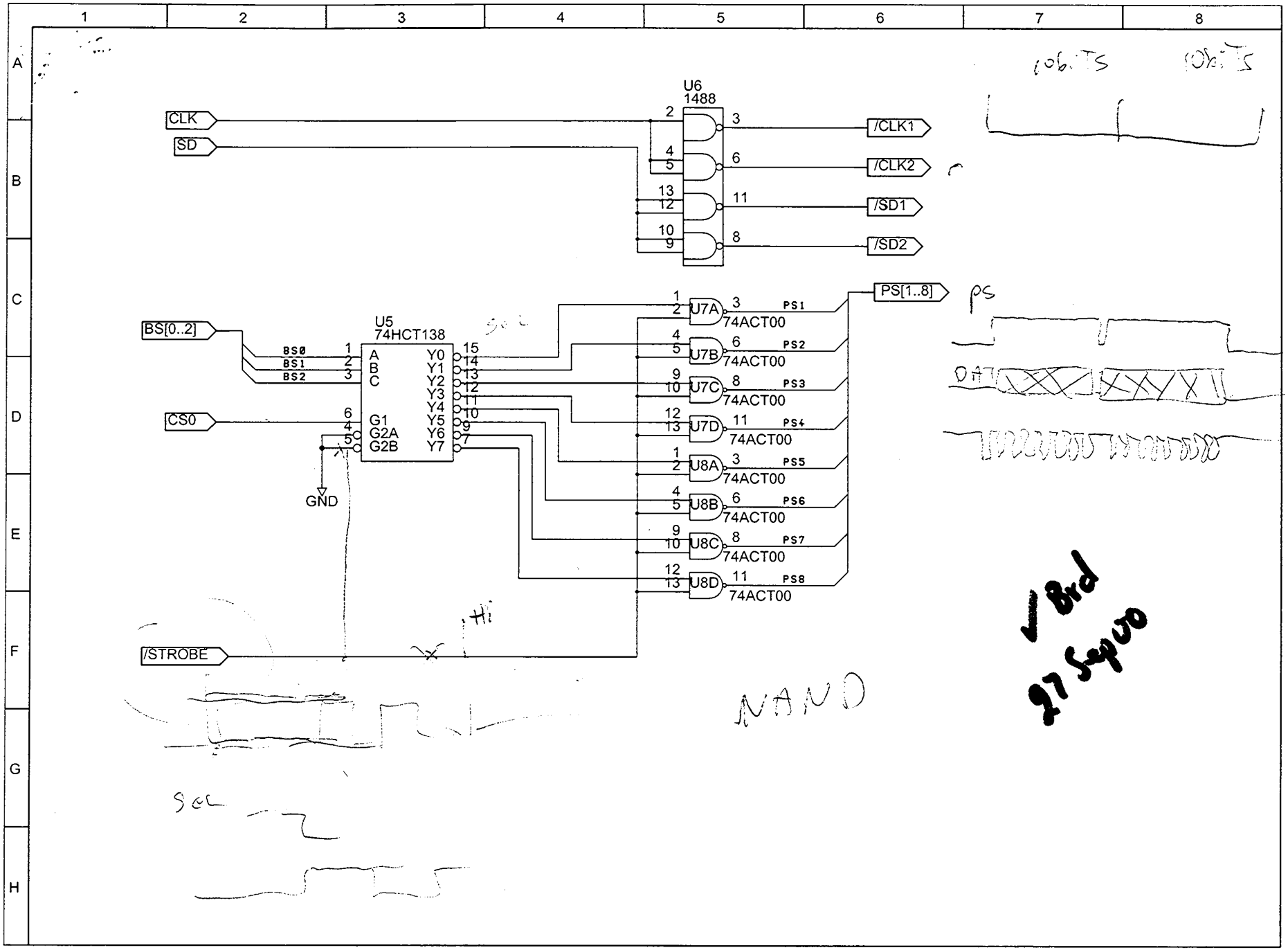
U6
1488
CLK
SD
/CLK1
/CLK2
/SD1
/SD2
U5
74HCT138
BS[0..2]
BS0
BS1
BS2
CS0
GND
/STROBE
A
B
C
G1
G2A
G2B
Y0
Y1
Y2
Y3
Y4
Y5
Y6
Y7
U7A
U7B
U7C
U7D
U8A
U8B
U8C
U8D
74ACT00
PS1
PS2
PS3
PS4
PS5
PS6
PS7
PS8
PS[1..8]
NAND
Brd
27 Sep 00

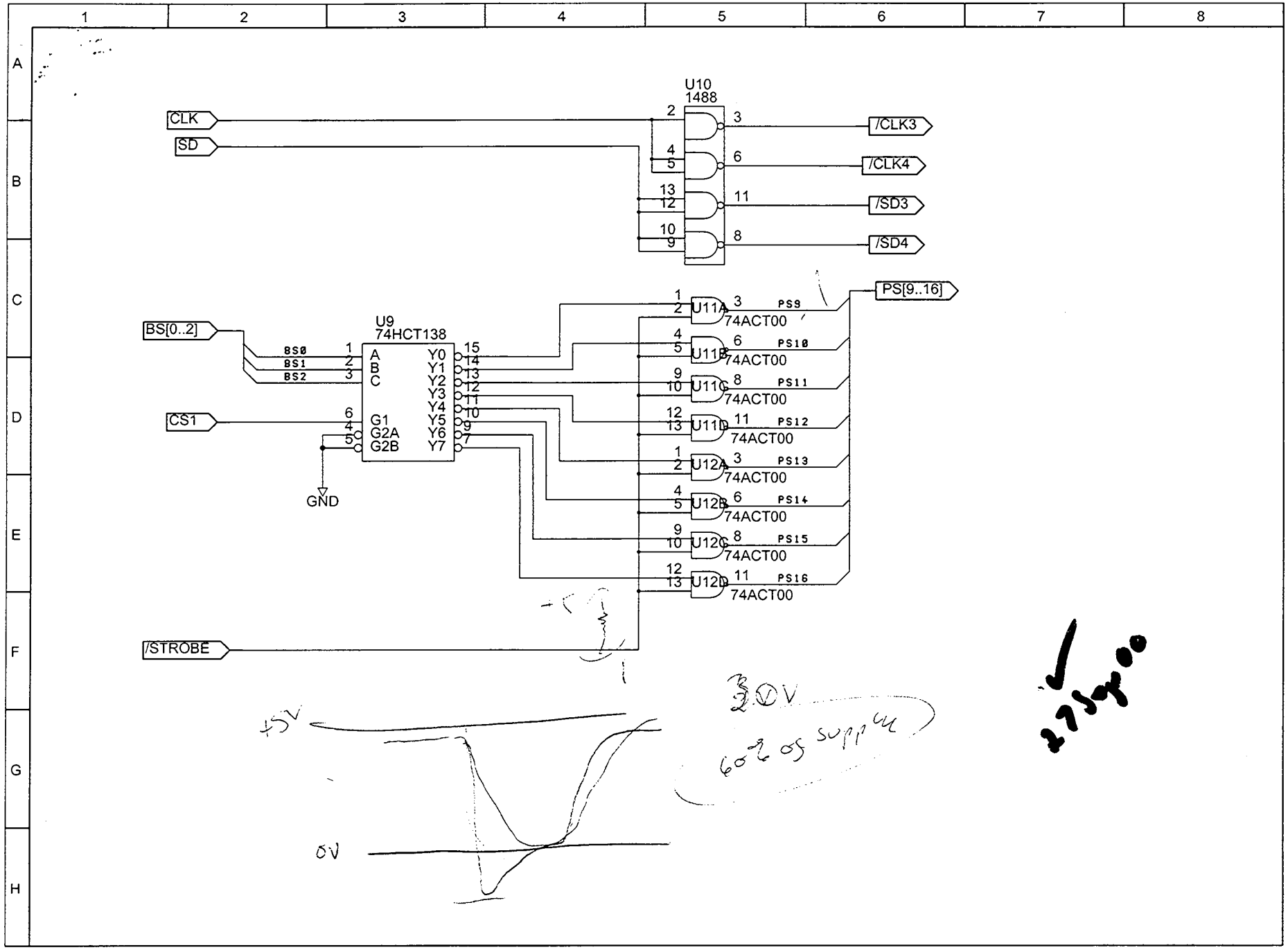
U10
1488
CLK
SD
/CLK3
/CLK4
/SD3
/SD4
PS[9..16]
BS[0..2]
BS0
BS1
BS2
U9
74HCT138
A
B
C
G1
G2A
G2B
Y0
Y1
Y2
Y3
Y4
Y5
Y6
Y7
CS1
GND
U11A
U11B
U11C
U11D
U12A
U12B
U12C
U12D
74ACT00
PS9
PS10
PS11
PS12
PS13
PS14
PS15
PS16
/STROBE
+5V
0V
3.0V
60% of supply

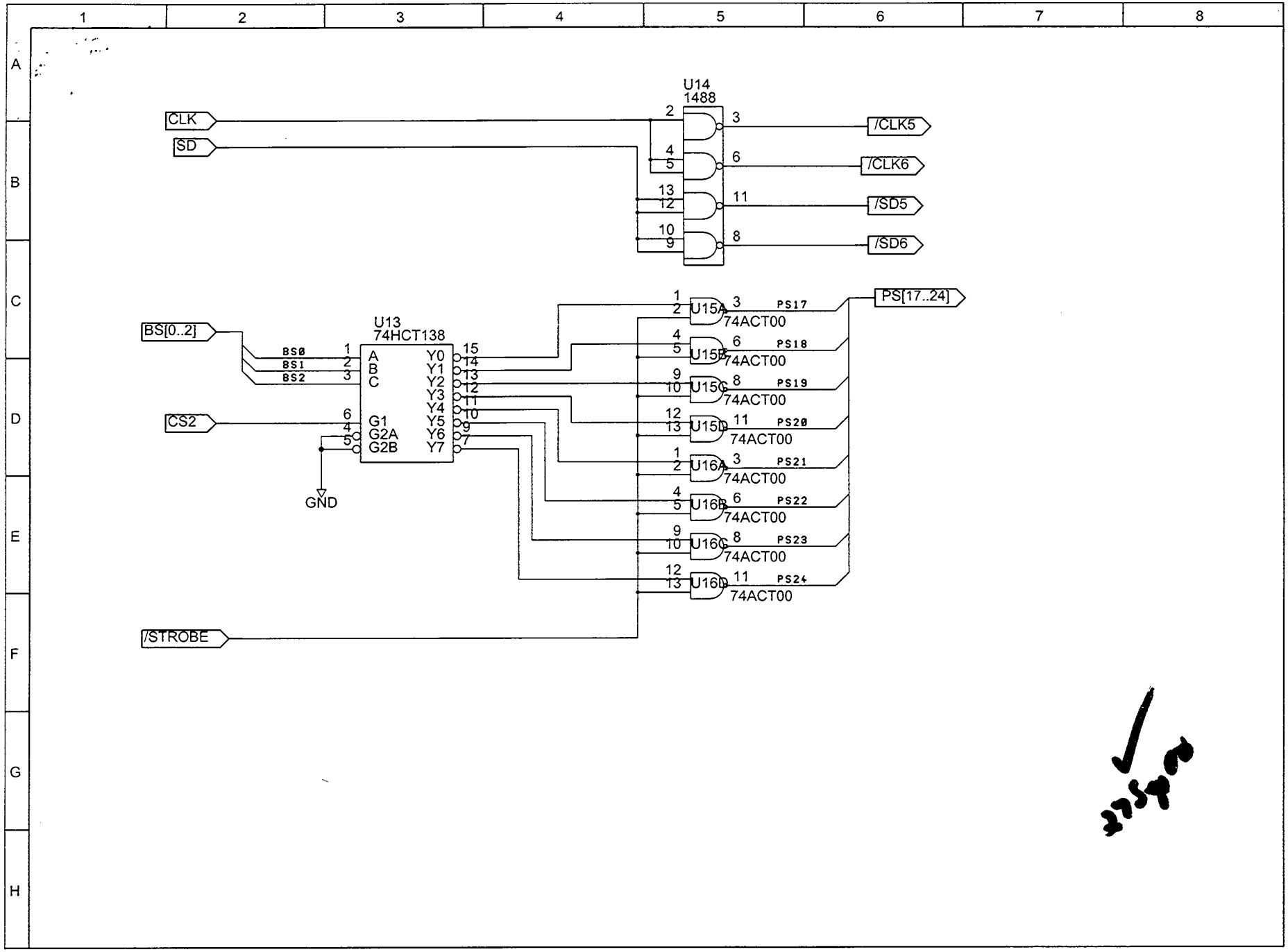
U14
1488
CLK
SD
/CLK5
/CLK6
/SD5
/SD6
U13
74HCT138
BS[0..2]
BS0
BS1
BS2
CS2
GND
A
B
C
G1
G2A
G2B
Y0
Y1
Y2
Y3
Y4
Y5
Y6
Y7
U15A
U15B
U15C
U15D
U16A
U16B
U16C
U16D
74ACT00
PS17
PS18
PS19
PS20
PS21
PS22
PS23
PS24
PS[17..24]
/STROBE

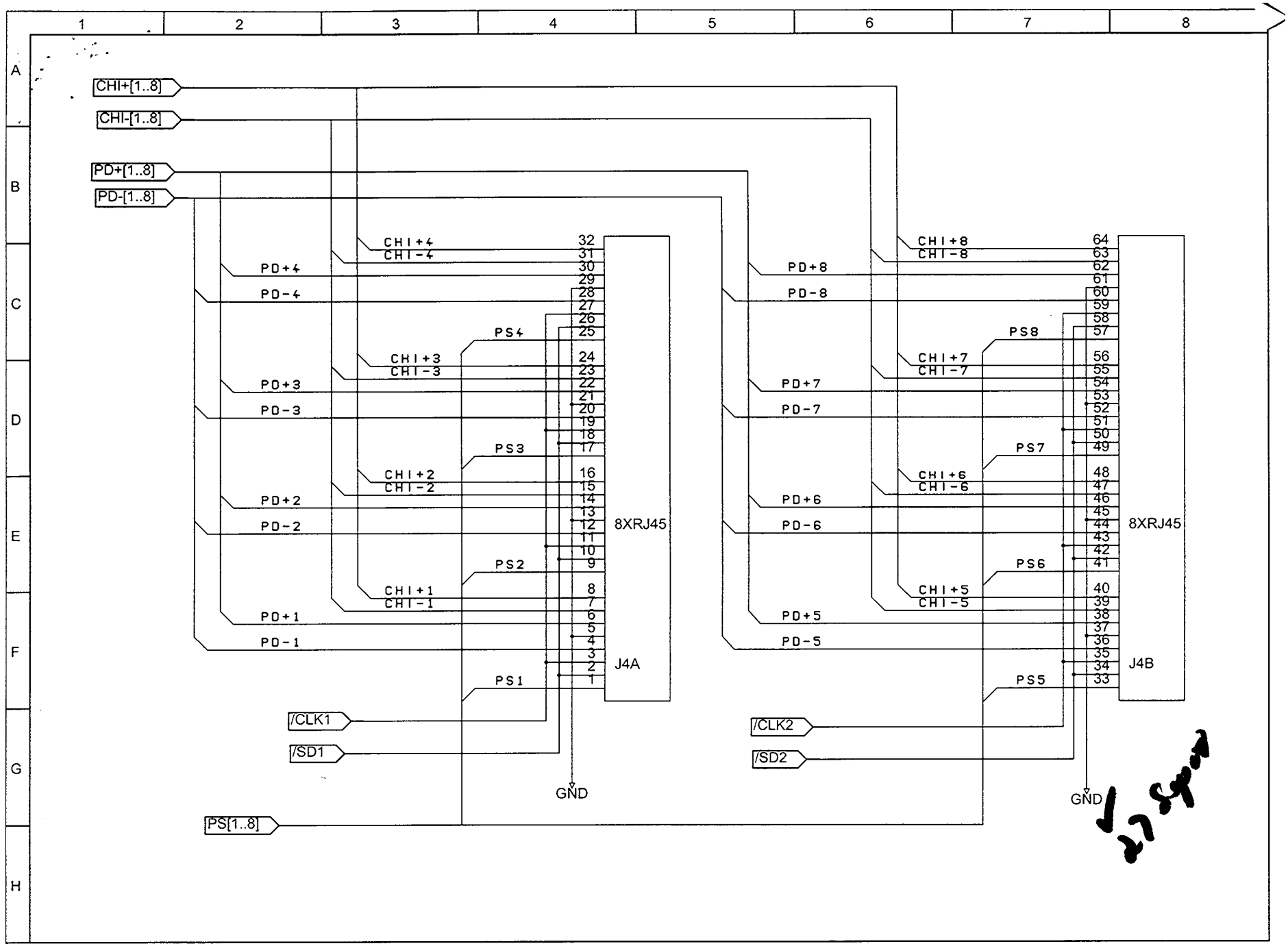
CHI+[1..8]
CHI-[1..8]
PD+[1..8]
PD-[1..8]
PS[1..8]
/CLK1
/SD1
/CLK2
/SD2
8XRJ45
J4A
8XRJ45
J4B
GND
GND
CHI+4
CHI-4
PD+4
PD-4
PS4
CHI+3
CHI-3
PD+3
PD-3
PS3
CHI+2
CHI-2
PD+2
PD-2
PS2
CHI+1
CHI-1
PD+1
PD-1
PS1
CHI+8
CHI-8
PD+8
PD-8
PS8
CHI+7
CHI-7
PD+7
PD-7
PS7
CHI+6
CHI-6
PD+6
PD-6
PS6
CHI+5
CHI-5
PD+5
PD-5
PS5

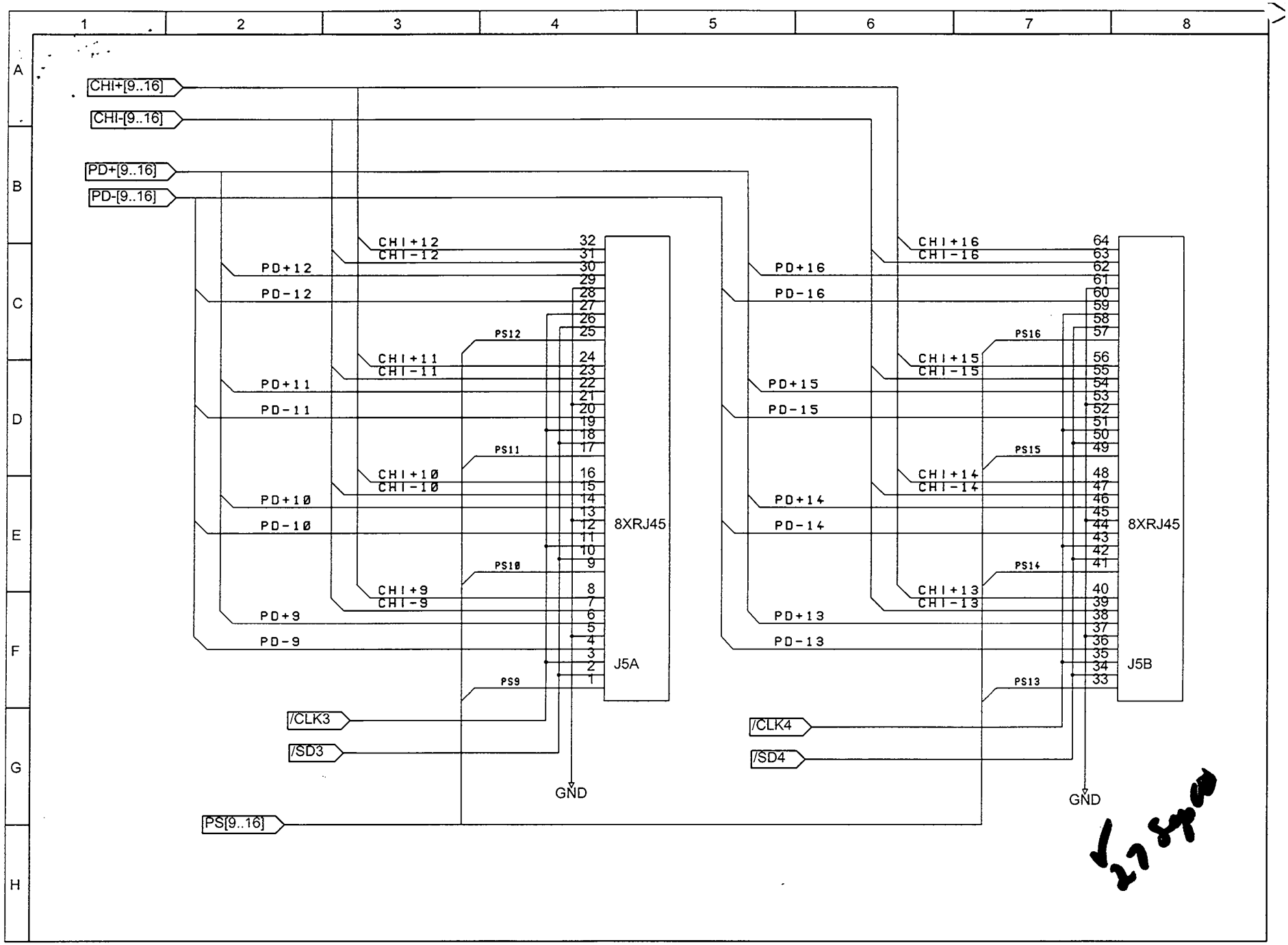
CHI+[9..16]
CHI-[9..16]
PD+[9..16]
PD-[9..16]
CHI+12
CHI-12
PD+12
PD-12
PS12
CHI+11
CHI-11
PD+11
PD-11
PS11
CHI+10
CHI-10
PD+10
PD-10
PS10
CHI+9
CHI-9
PD+9
PD-9
PS9
8XRJ45
J5A
/CLK3
/SD3
GND
PS[9..16]
CHI+16
CHI-16
PD+16
PD-16
PS16
CHI+15
CHI-15
PD+15
PD-15
PS15
CHI+14
CHI-14
PD+14
PD-14
PS14
CHI+13
CHI-13
PD+13
PD-13
PS13
8XRJ45
J5B
/CLK4
/SD4
GND

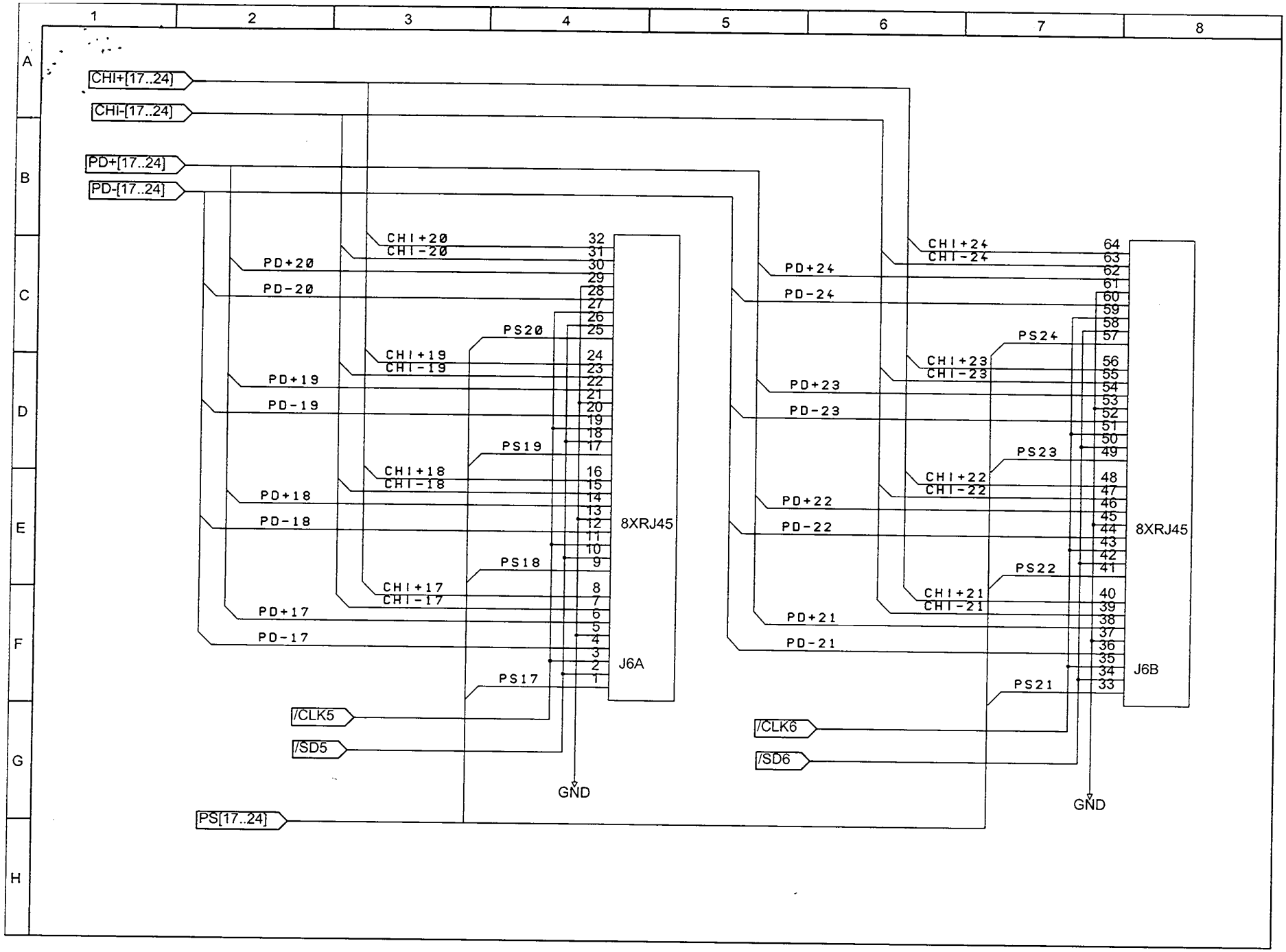
CHI+[17..24]
CHI-[17..24]
PD+[17..24]
PD-[17..24]
PS[17..24]
/CLK5
/SD5
/CLK6
/SD6
GND
GND
8XRJ45
J6A
8XRJ45
J6B
CHI+20
CHI-20
PD+20
PD-20
PS20
CHI+19
CHI-19
PD+19
PD-19
PS19
CHI+18
CHI-18
PD+18
PD-18
PS18
CHI+17
CHI-17
PD+17
PD-17
PS17
CHI+24
CHI-24
PD+24
PD-24
PS24
CHI+23
CHI-23
PD+23
PD-23
PS23
CHI+22
CHI-22
PD+22
PD-22
PS22
CHI+21
CHI-21
PD+21
PD-21
PS21

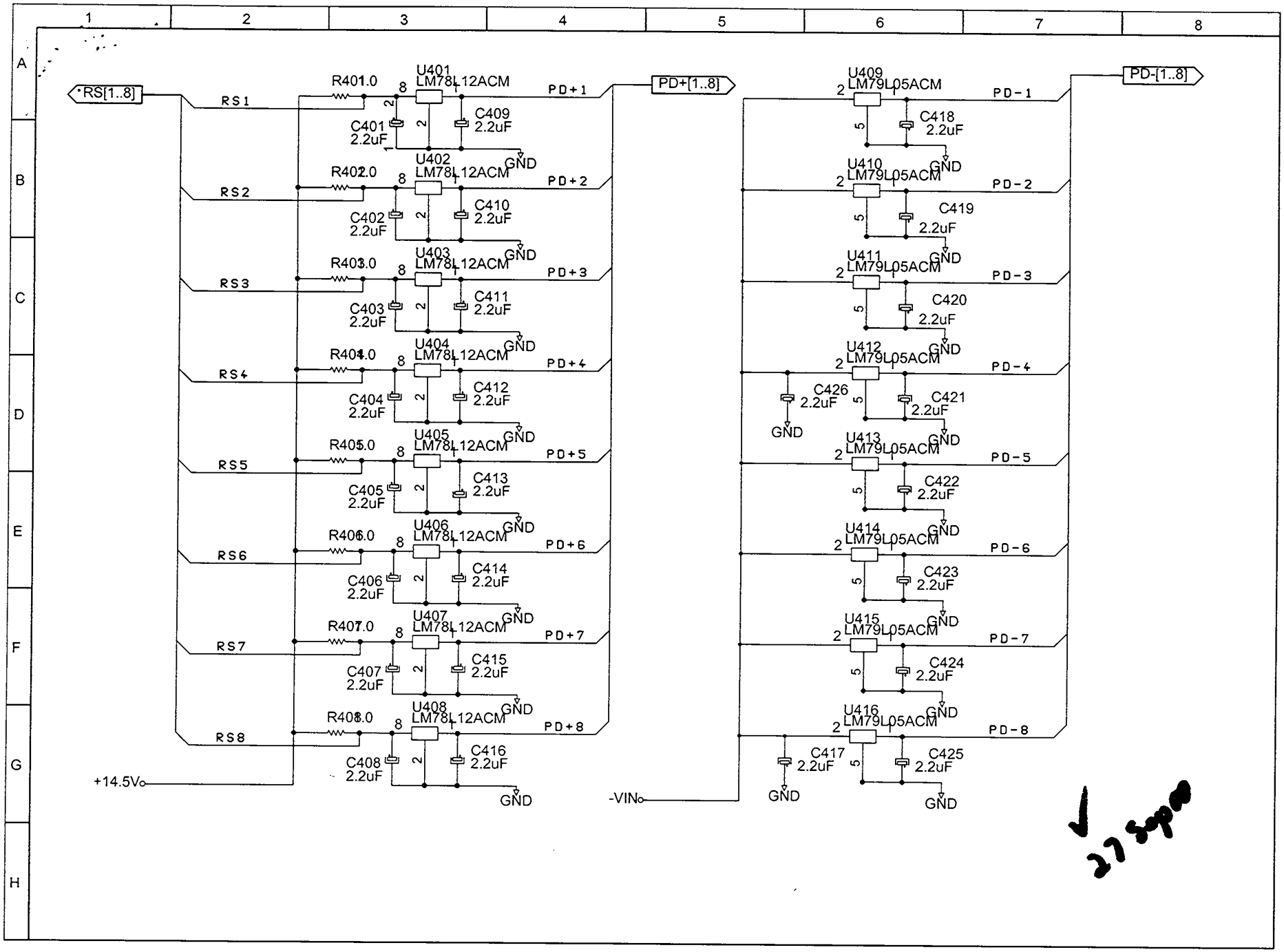
RS[1..8]
RS1
RS2
RS3
RS4
RS5
RS6
RS7
RS8
R401 1.0
R402 2.0
R403 3.0
R404 4.0
R405 5.0
R406 6.0
R407 7.0
R408 8.0
U401 LM78L12ACM
U402 LM78L12ACM
U403 LM78L12ACM
U404 LM78L12ACM
U405 LM78L12ACM
U406 LM78L12ACM
U407 LM78L12ACM
U408 LM78L12ACM
C401 2.2uF
C402 2.2uF
C403 2.2uF
C404 2.2uF
C405 2.2uF
C406 2.2uF
C407 2.2uF
C408 2.2uF
C409 2.2uF
C410 2.2uF
C411 2.2uF
C412 2.2uF
C413 2.2uF
C414 2.2uF
C415 2.2uF
C416 2.2uF
PD+1
PD+2
PD+3
PD+4
PD+5
PD+6
PD+7
PD+8
PD+[1..8]
GND
+14.5V
-VIN
U409 LM79L05ACM
U410 LM79L05ACM
U411 LM79L05ACM
U412 LM79L05ACM
U413 LM79L05ACM
U414 LM79L05ACM
U415 LM79L05ACM
U416 LM79L05ACM
C418 2.2uF
C419 2.2uF
C420 2.2uF
C421 2.2uF
C422 2.2uF
C423 2.2uF
C424 2.2uF
C425 2.2uF
C426 2.2uF
C417 2.2uF
PD-1
PD-2
PD-3
PD-4
PD-5
PD-6
PD-7
PD-8
PD-[1..8]

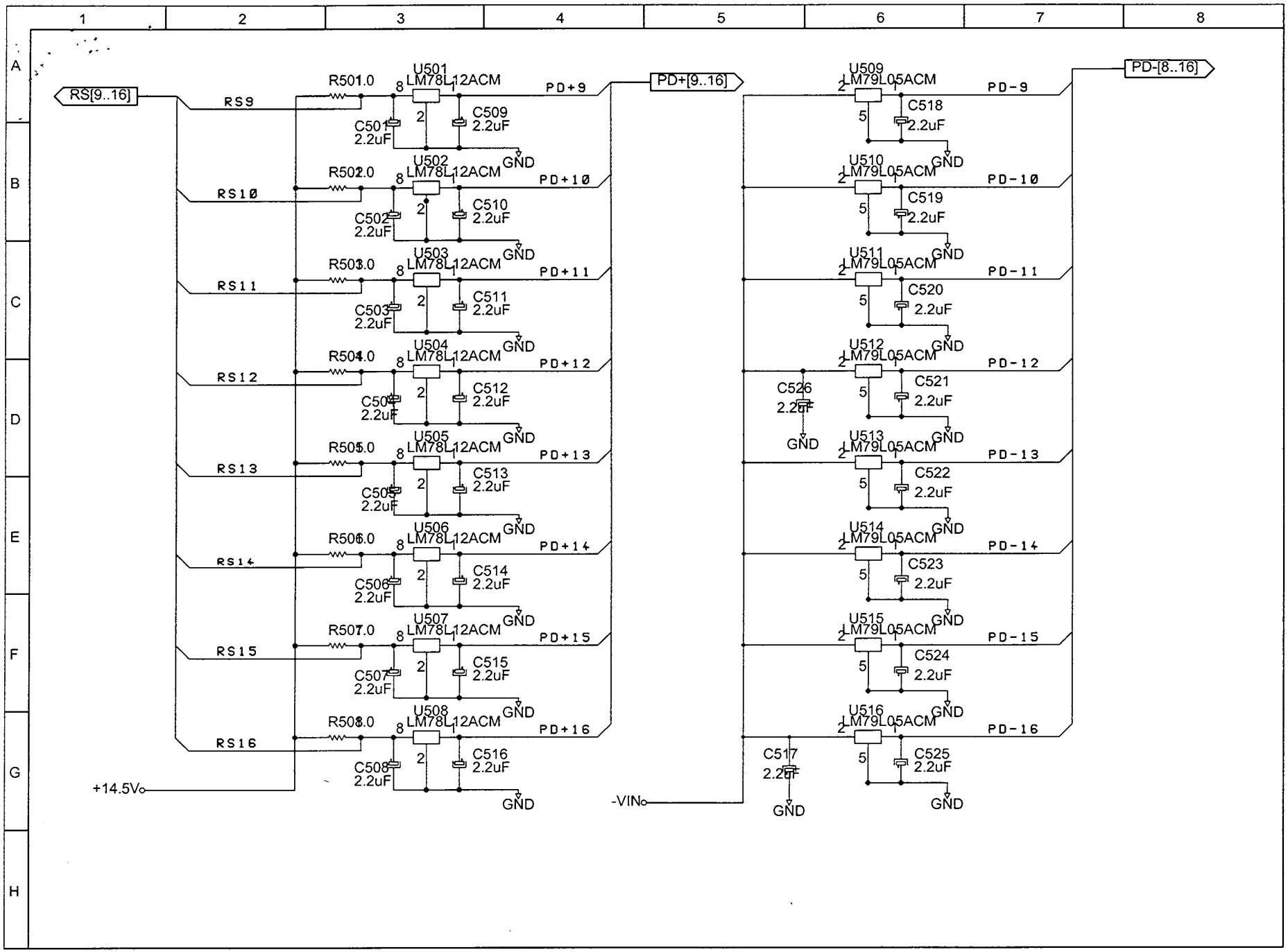
RS[9..16]
PD+[9..16]
PD-[8..16]
+14.5V
-VIN
GND
U501 LM78L12ACM
U502 LM78L12ACM
U503 LM78L12ACM
U504 LM78L12ACM
U505 LM78L12ACM
U506 LM78L12ACM
U507 LM78L12ACM
U508 LM78L12ACM
U509 LM79L05ACM
U510 LM79L05ACM
U511 LM79L05ACM
U512 LM79L05ACM
U513 LM79L05ACM
U514 LM79L05ACM
U515 LM79L05ACM
U516 LM79L05ACM
R501 1.0
R502 2.0
R503 3.0
R504 4.0
R505 5.0
R506 6.0
R507 7.0
R508 8.0
RS9
RS10
RS11
RS12
RS13
RS14
RS15
RS16
PD+9
PD+10
PD+11
PD+12
PD+13
PD+14
PD+15
PD+16
PD-9
PD-10
PD-11
PD-12
PD-13
PD-14
PD-15
PD-16
C501 2.2uF
C502 2.2uF
C503 2.2uF
C504 2.2uF
C505 2.2uF
C506 2.2uF
C507 2.2uF
C508 2.2uF
C509 2.2uF
C510 2.2uF
C511 2.2uF
C512 2.2uF
C513 2.2uF
C514 2.2uF
C515 2.2uF
C516 2.2uF
C517 2.2uF
C518 2.2uF
C519 2.2uF
C520 2.2uF
C521 2.2uF
C522 2.2uF
C523 2.2uF
C524 2.2uF
C525 2.2uF
C526 2.2uF

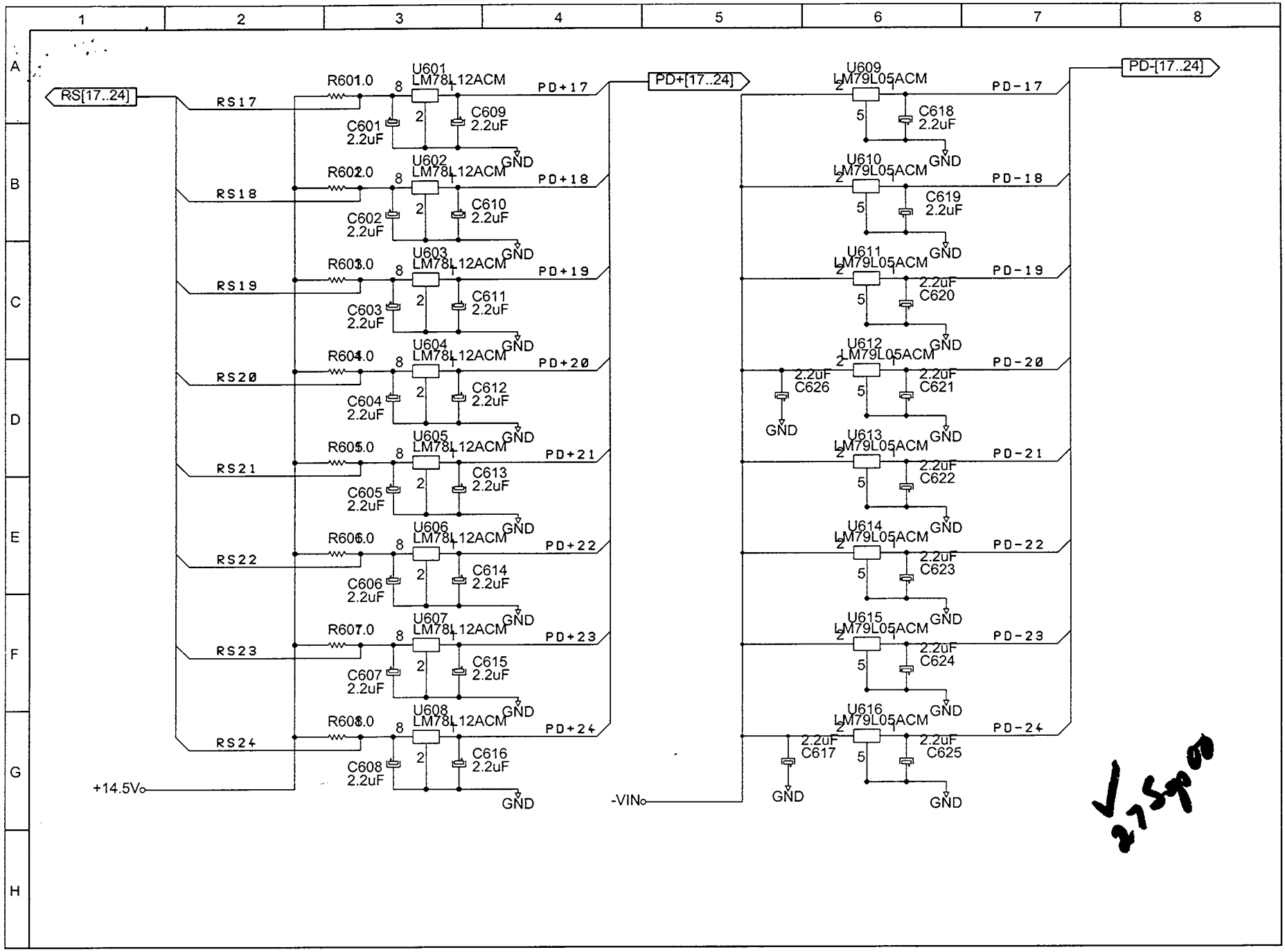
RS[17..24]
PD+[17..24]
PD-[17..24]
+14.5V
-VIN
GND
RS17
RS18
RS19
RS20
RS21
RS22
RS23
RS24
R601 1.0
R602 1.0
R603 1.0
R604 1.0
R605 1.0
R606 1.0
R607 1.0
R608 1.0
U601 LM78L12ACM
U602 LM78L12ACM
U603 LM78L12ACM
U604 LM78L12ACM
U605 LM78L12ACM
U606 LM78L12ACM
U607 LM78L12ACM
U608 LM78L12ACM
C601 2.2uF
C602 2.2uF
C603 2.2uF
C604 2.2uF
C605 2.2uF
C606 2.2uF
C607 2.2uF
C608 2.2uF
C609 2.2uF
C610 2.2uF
C611 2.2uF
C612 2.2uF
C613 2.2uF
C614 2.2uF
C615 2.2uF
C616 2.2uF
PD+17
PD+18
PD+19
PD+20
PD+21
PD+22
PD+23
PD+24
U609 LM79L05ACM
U610 LM79L05ACM
U611 LM79L05ACM
U612 LM79L05ACM
U613 LM79L05ACM
U614 LM79L05ACM
U615 LM79L05ACM
U616 LM79L05ACM
C618 2.2uF
C619 2.2uF
C620 2.2uF
C621 2.2uF
C622 2.2uF
C623 2.2uF
C624 2.2uF
C625 2.2uF
C626 2.2uF
C617 2.2uF
PD-17
PD-18
PD-19
PD-20
PD-21
PD-22
PD-23
PD-24

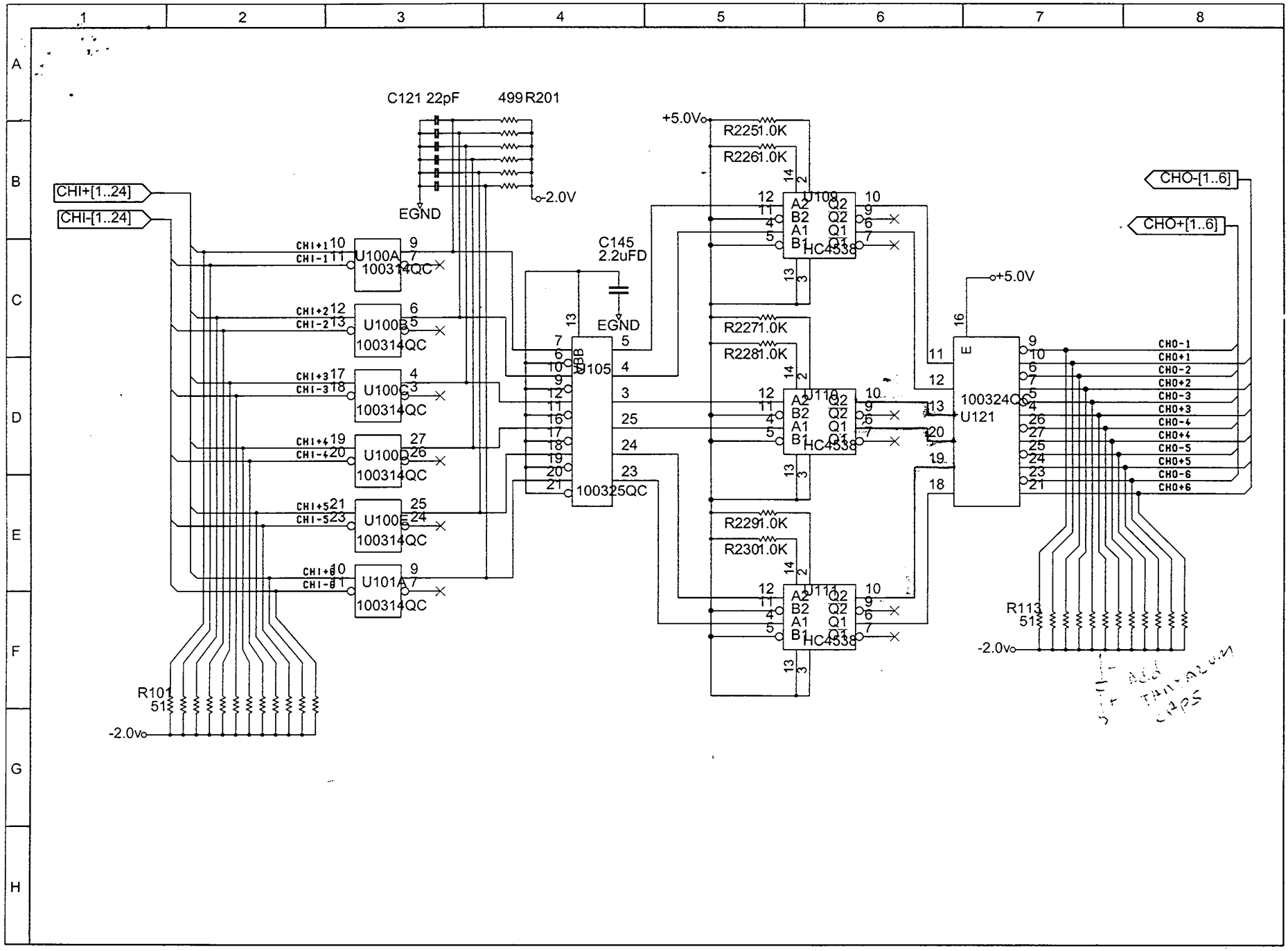
CHI+[1..24]
CHI-[1..24]
C121 22pF
499 R201
EGND
-2.0V
U100A 100314QC
U100B 100314QC
U100C 100314QC
U100D 100314QC
U100E 100314QC
U101A 100314QC
R101 51
-2.0V
C145 2.2uFD
EGND
U105 100325QC
+5.0V
R225 1.0K
R226 1.0K
R227 1.0K
R228 1.0K
R229 1.0K
R230 1.0K
U109 HC4538
U110 HC4538
U114 HC4538
U121 100324QC
+5.0V
CHO-[1..6]
CHO+[1..6]
R113 51
-2.0V

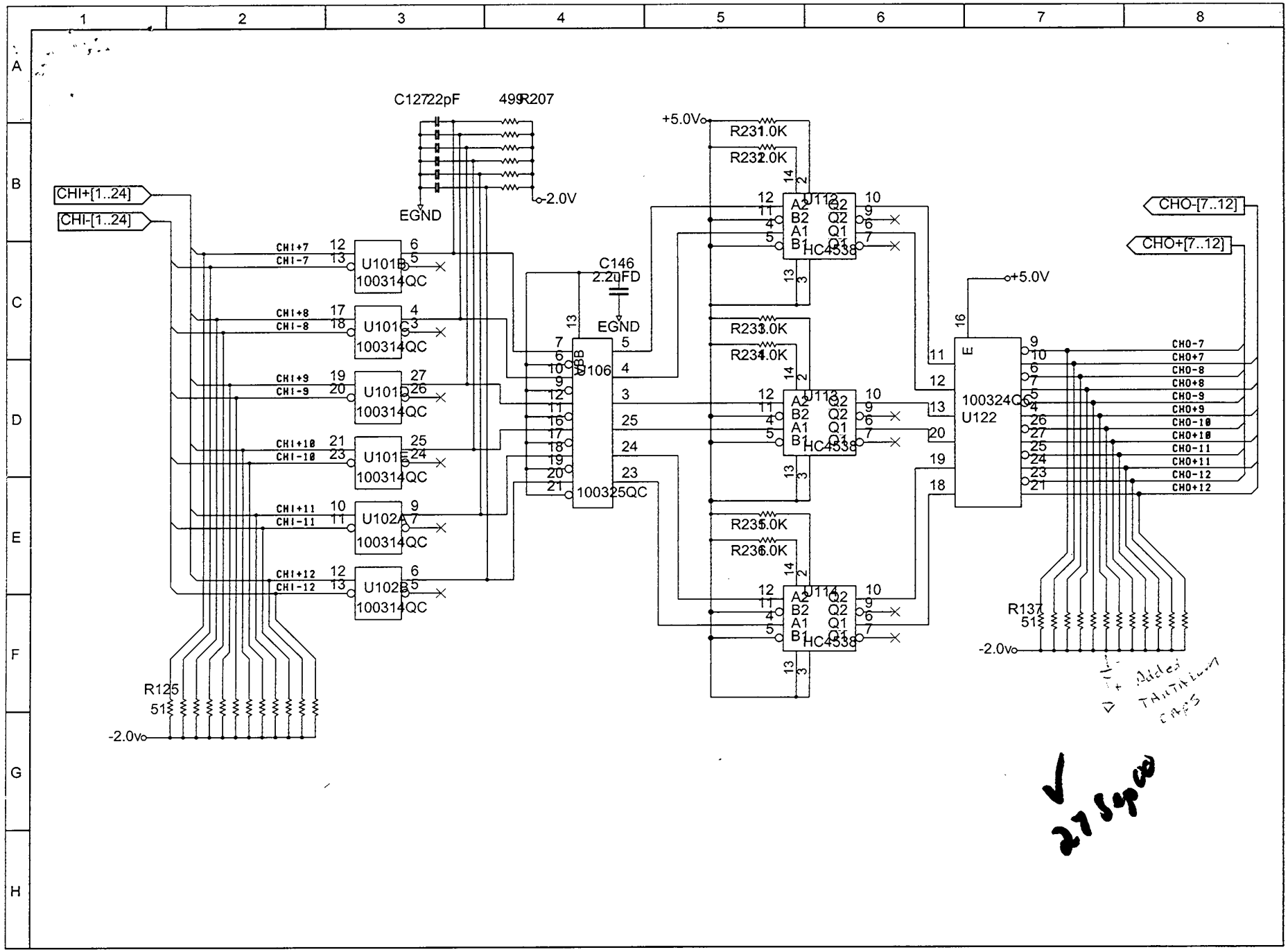
C127 22pF
499 R207
-2.0V
EGND
CHI+[1..24]
CHI-[1..24]
CHI+7
CHI-7
CHI+8
CHI-8
CHI+9
CHI-9
CHI+10
CHI-10
CHI+11
CHI-11
CHI+12
CHI-12
U101B
U101C
U101D
U101E
U102A
U102B
100314QC
R125
51
-2.0V
C146
2.20FD
EGND
U106
100325QC
+5.0V
R231 1.0K
R232 2.0K
R233 3.0K
R234 4.0K
R235 5.0K
R236 6.0K
U112
U113
U114
HC4538
+5.0V
U122
100324QC
CHO-[7..12]
CHO+[7..12]
CHO-7
CHO+7
CHO-8
CHO+8
CHO-9
CHO+9
CHO-10
CHO+10
CHO-11
CHO+11
CHO-12
CHO+12
R137
51
-2.0V
Added TANTALUM CAPS
27 Spec

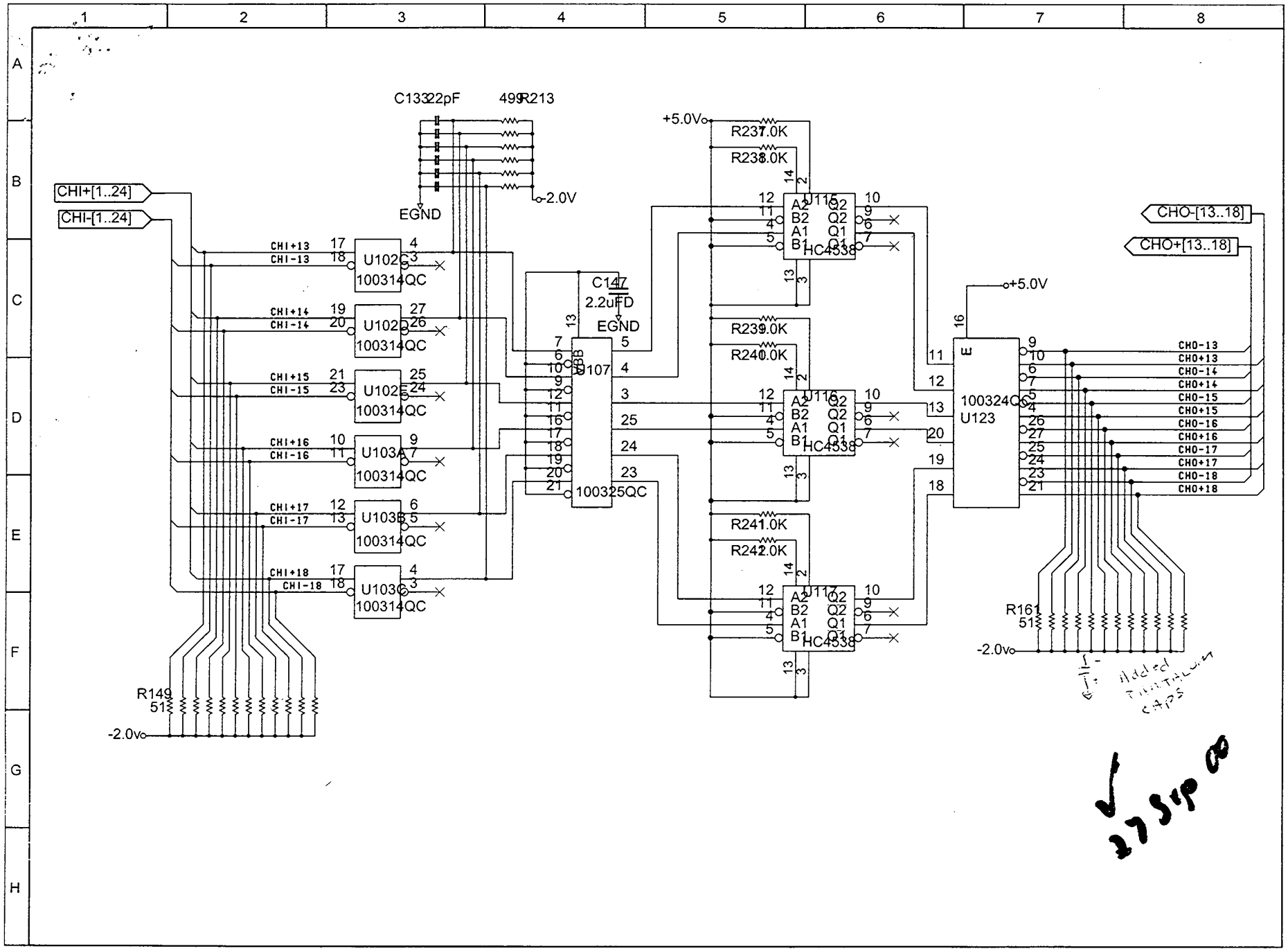
CHI+[1..24]
CHI-[1..24]
C133 22pF
499 R213
EGND
-2.0V
CHI+13
CHI-13
CHI+14
CHI-14
CHI+15
CHI-15
CHI+16
CHI-16
CHI+17
CHI-17
CHI+18
CHI-18
U102C
U102D
U102E
U103A
U103B
U103C
100314QC
R149
51
-2.0V
C147
2.2uFD
EGND
U107
100325QC
+5.0V
R237 7.0K
R238 8.0K
R239 9.0K
R240 10.0K
R241 11.0K
R242 12.0K
U115
U116
U117
HC4538
+5.0V
U123
100324QC
CHO-[13..18]
CHO+[13..18]
CHO-13
CHO+13
CHO-14
CHO+14
CHO-15
CHO+15
CHO-16
CHO+16
CHO-17
CHO+17
CHO-18
CHO+18
R161
51
-2.0V
Added termination caps
27 Sep 00

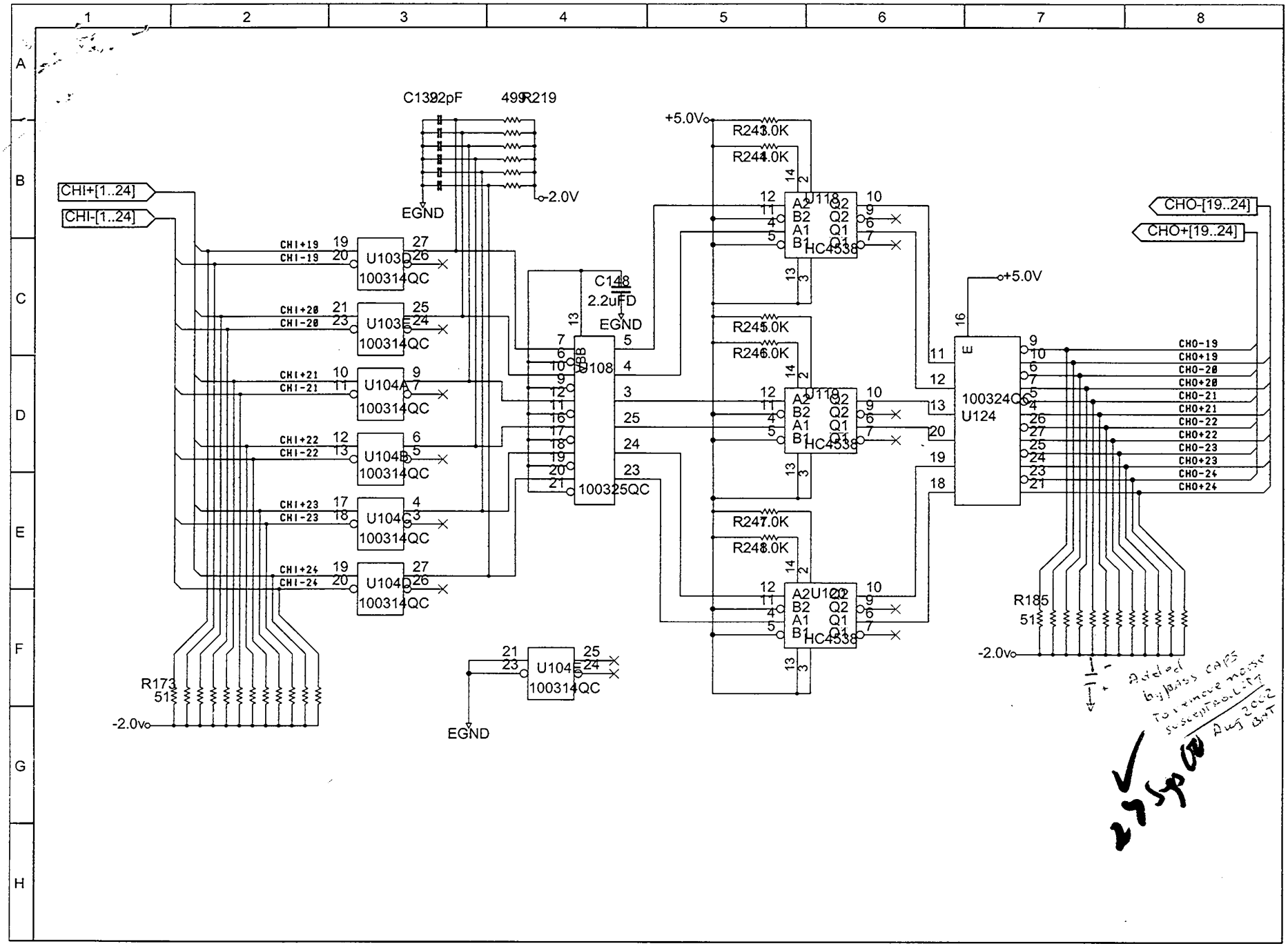

CHI+[1..24]
CHI-[1..24]
CHO-[19..24]
CHO+[19..24]
C139 2pF
499 R219
-2.0V
EGND
+5.0V
R243 1.0K
R244 1.0K
R245 1.0K
R246 1.0K
R247 1.0K
R248 1.0K
U118
U119
U120
HC4538
C148
2.2uFD
U108
100325QC
U103D
U103E
U104A
U104B
U104C
U104D
U104E
100314QC
U124
100324QC
R173
51
R185
51
CHI+19
CHI-19
CHI+20
CHI-20
CHI+21
CHI-21
CHI+22
CHI-22
CHI+23
CHI-23
CHI+24
CHI-24
CHO-19
CHO+19
CHO-20
CHO+20
CHO-21
CHO+21
CHO-22
CHO+22
CHO-23
CHO+23
CHO-24
CHO+24
Added bypass caps to remove noise susceptability Aug 2002 BAT
27 Sep 00

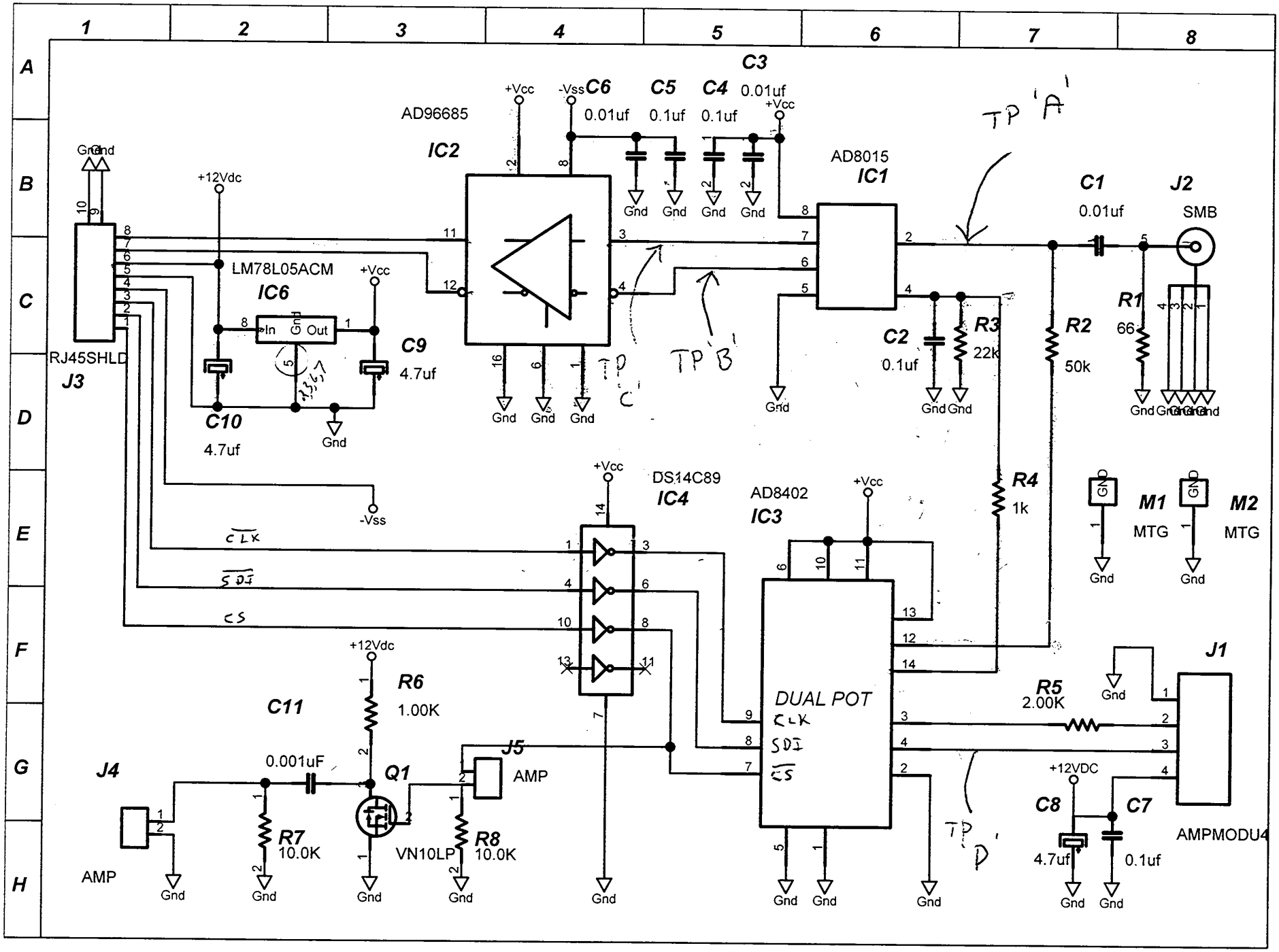
AD96685
IC2
+Vcc
-Vss
C6
0.01uf
C5
0.1uf
C4
0.1uf
C3
0.01uf
AD8015
IC1
TP 'A'
TP 'B'
TP 'C'
TP 'D'
C1
0.01uf
J2
SMB
R1
66
R2
50k
R3
22k
C2
0.1uf
R4
1k
M1
MTG
M2
MTG
J1
AMPMODU4
R5
2.00K
+12VDC
C8
4.7uf
C7
0.1uf
DUAL POT
CLK
SDI
CS
AD8402
IC3
DS14C89
IC4
+12Vdc
LM78L05ACM
IC6
In
Gnd
Out
C9
4.7uf
C10
4.7uf
RJ45SHLD
J3
R6
1.00K
C11
0.001uF
Q1
VN10LP
R7
10.0K
R8
10.0K
J4
AMP
J5
AMP
Gnd

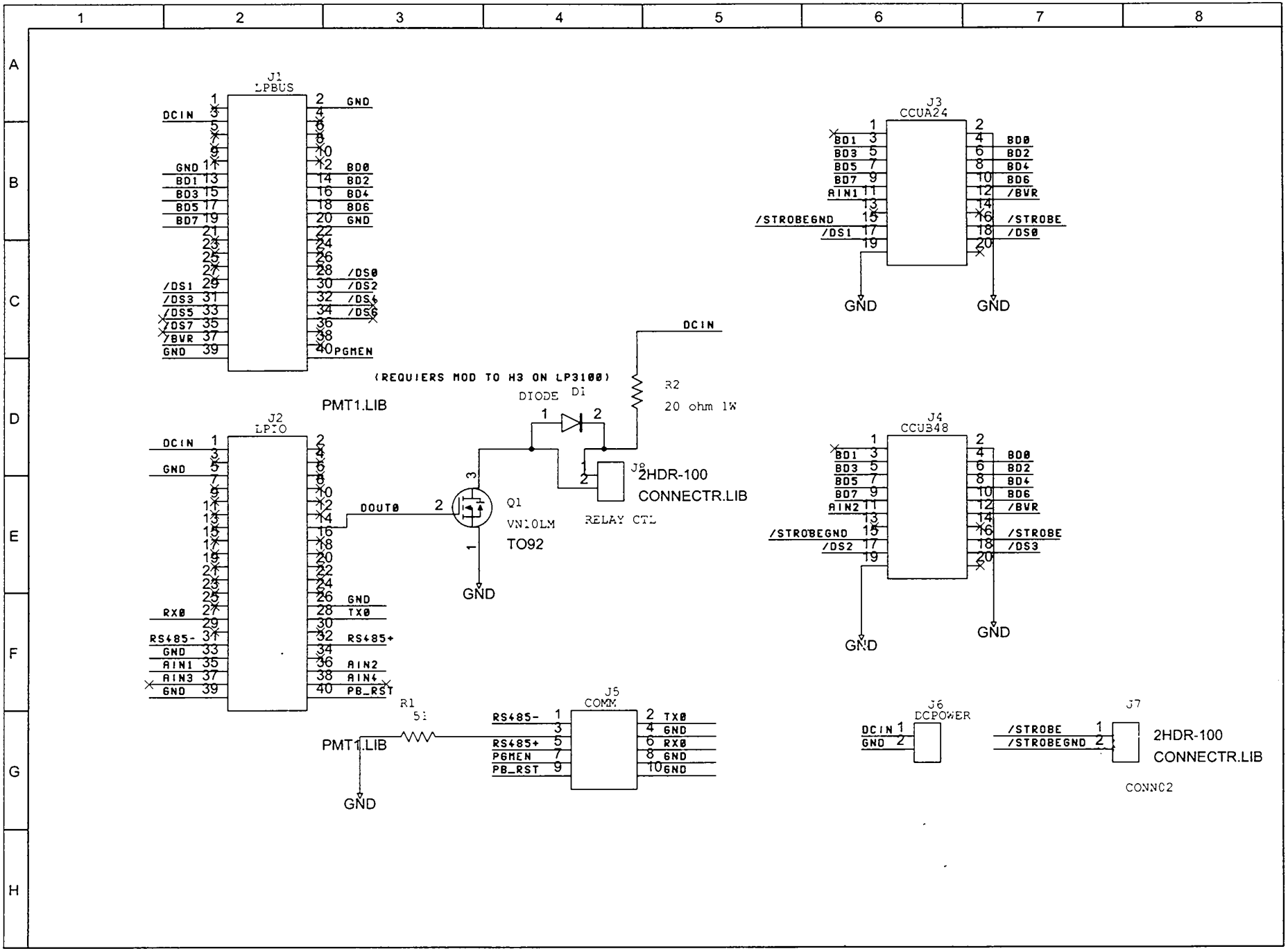
J1
LPBUS
DCIN
GND
BD1
BD3
BD5
BD7
/DS1
/DS3
/DS5
/DS7
/BVR
BD0
BD2
BD4
BD6
/DS0
/DS2
/DS4
/DS6
PGMEN
PMT1.LIB
J2
LPIO
DOUT0
RX0
TX0
RS485-
RS485+
AIN1
AIN2
AIN3
AIN4
PB_RST
(REQUIERS MOD TO H3 ON LP3100)
DIODE
D1
R2
20 ohm 1W
J8
2HDR-100
CONNECTR.LIB
RELAY CTL
Q1
VN10LM
TO92
J3
CCUA24
/STROBEGND
/STROBE
J4
CCUB48
/DS2
/DS3
R1
51
J5
COMM
J6
DCPOWER
J7
CONNC2

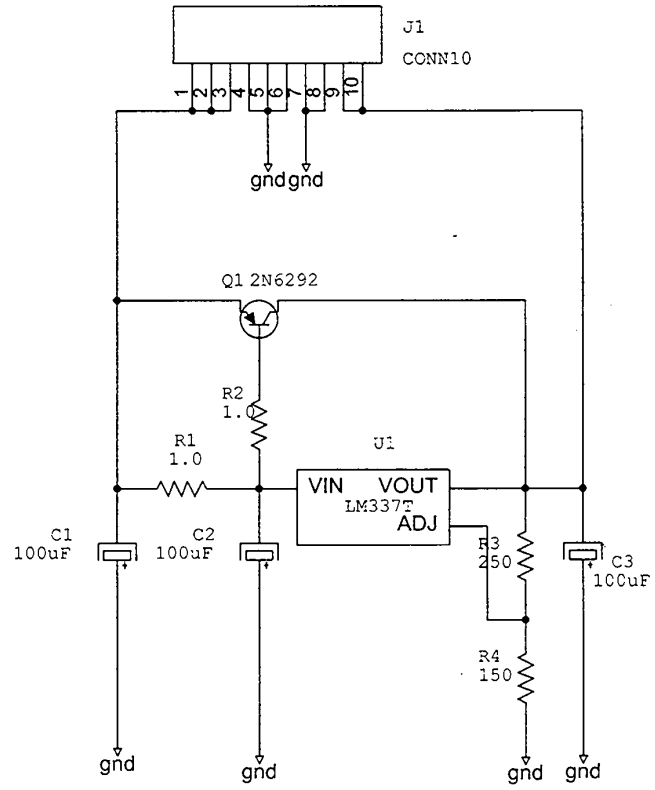
J1
CONN10
1
2
3
4
5
6
7
8
9
10
gnd
gnd
Q1 2N6292
R2
1.0
R1
1.0
U1
VIN
VOUT
LM337T
ADJ
C1
100uF
C2
100uF
R3
250
C3
100uF
R4
150
gnd
gnd
gnd
gnd

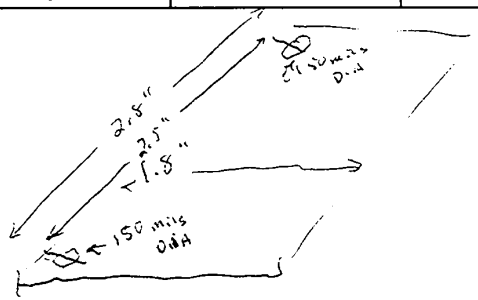
2.5"
2.5"
1.5"
150 mils
DIA

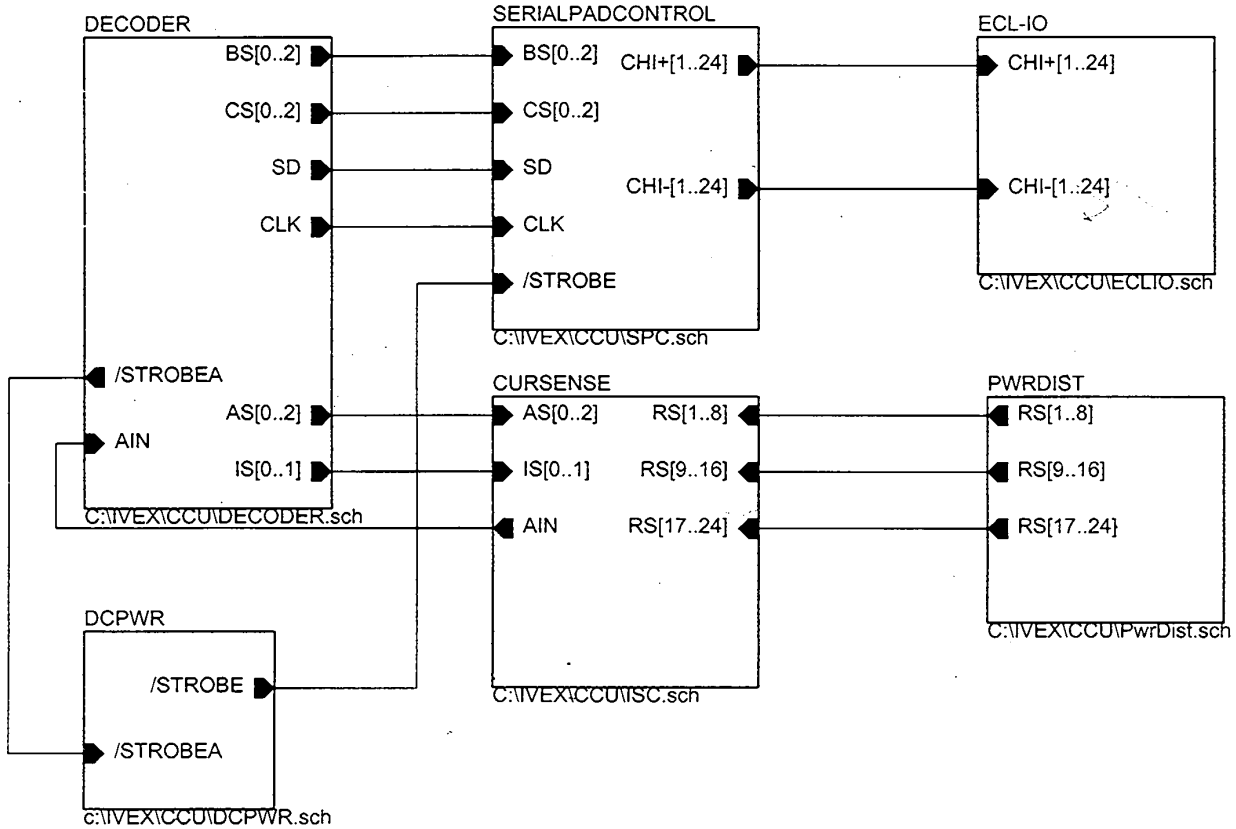


CCU SCHEMATIC
25 July, 2000

Susie pumpkin

R 530 757 4615X

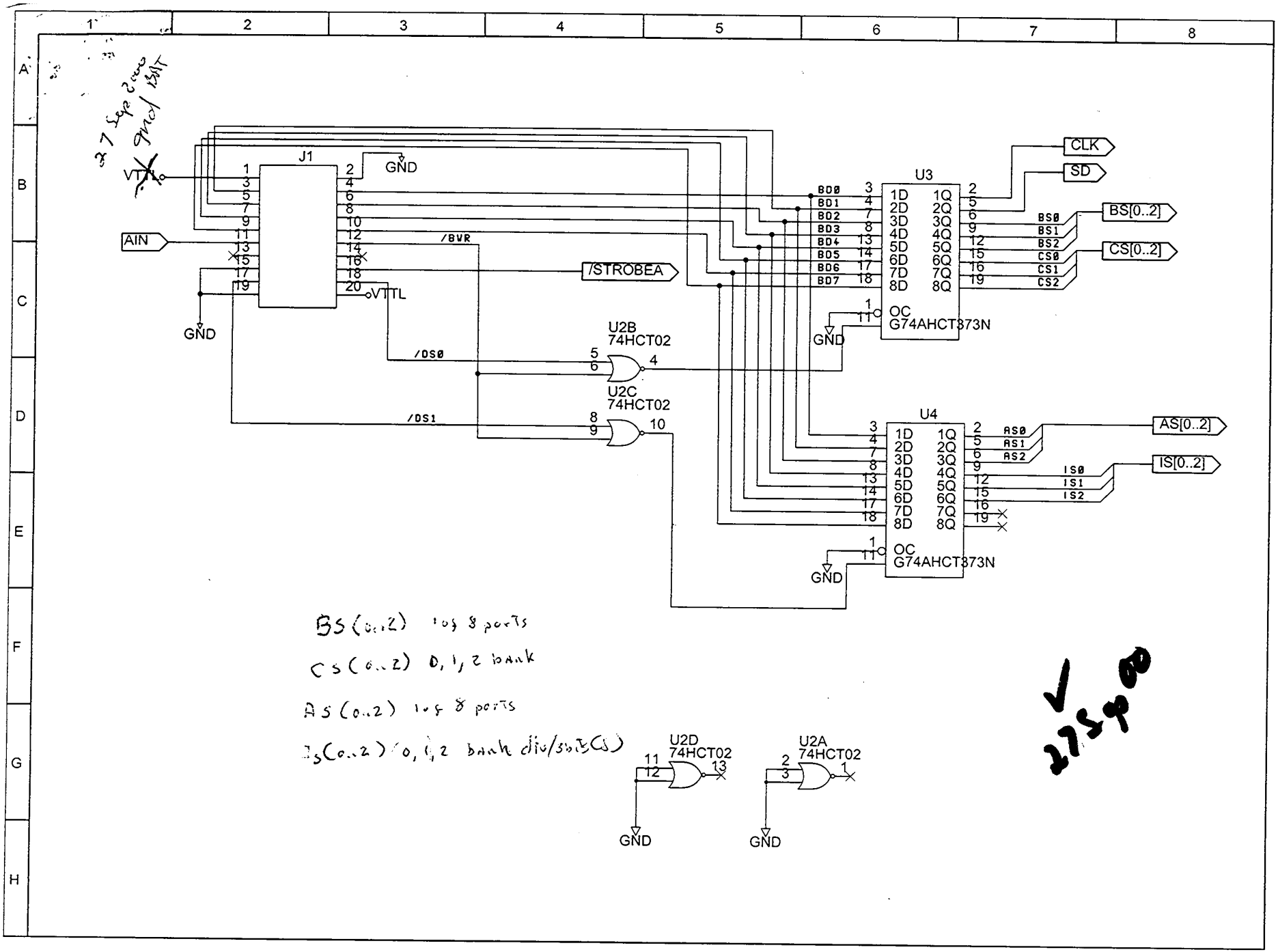


BS (0..2) 1 of 8 ports

CS (0..2) 0, 1, 2 bank

AS (0..2) 1 of 8 ports

IS (0..2) 0, 1, 2 bank div/3bits(S)

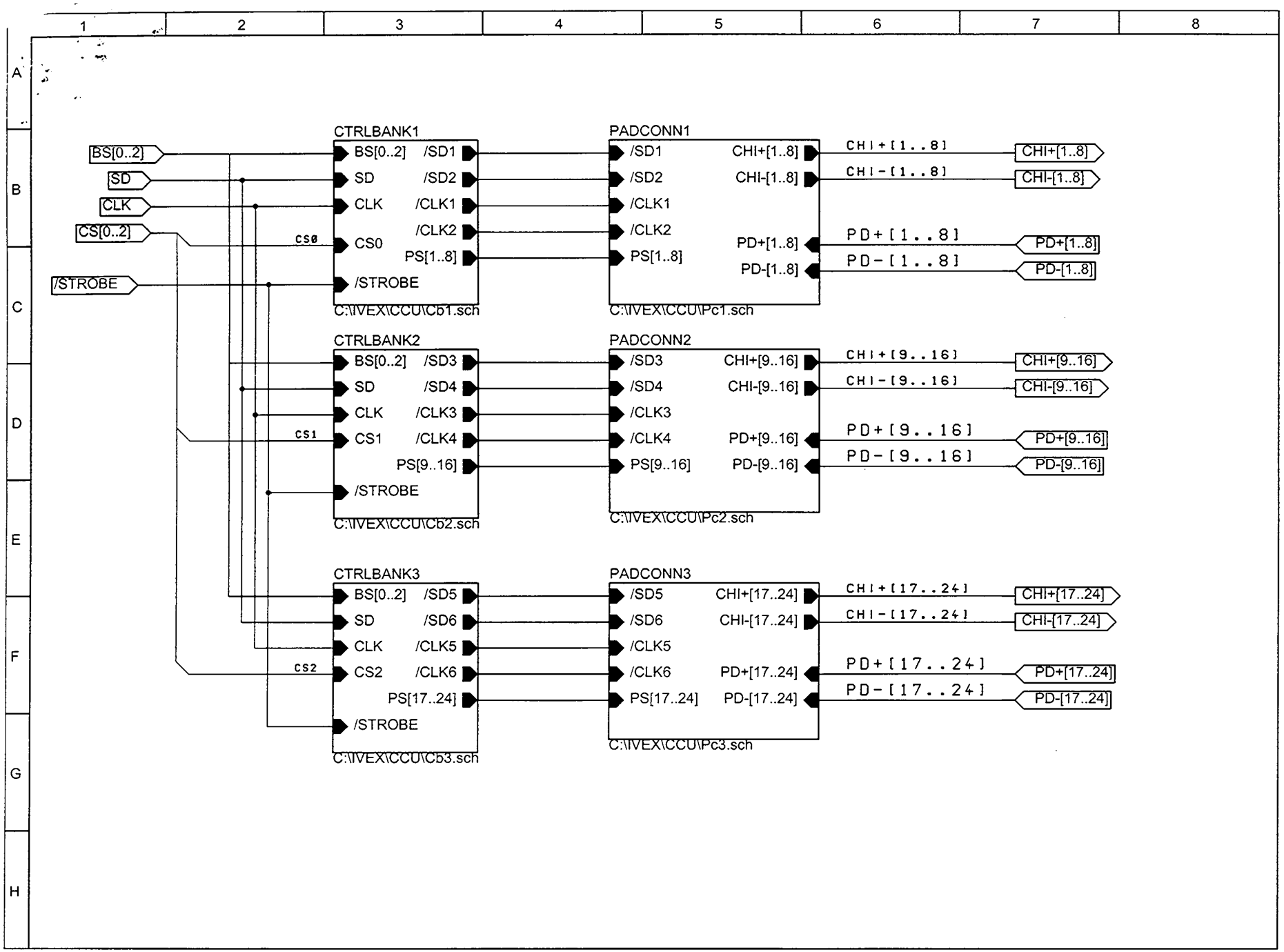
CTRLBANK1
BS[0..2]
SD
CLK
CS0
PS[1..8]
/STROBE
/SD1
/SD2
/CLK1
/CLK2
C:\IVEX\CCU\Cb1.sch
PADCONN1
CHI+[1..8]
CHI-[1..8]
PD+[1..8]
PD-[1..8]
C:\IVEX\CCU\Pc1.sch
CTRLBANK2
CS1
PS[9..16]
/SD3
/SD4
/CLK3
/CLK4
C:\IVEX\CCU\Cb2.sch
PADCONN2
CHI+[9..16]
CHI-[9..16]
PD+[9..16]
PD-[9..16]
C:\IVEX\CCU\Pc2.sch
CTRLBANK3
CS2
PS[17..24]
/SD5
/SD6
/CLK5
/CLK6
C:\IVEX\CCU\Cb3.sch
PADCONN3
CHI+[17..24]
CHI-[17..24]
PD+[17..24]
PD-[17..24]
C:\IVEX\CCU\Pc3.sch
BS[0..2]
SD
CLK
CS[0..2]
/STROBE
CHI+[1..8]
CHI-[1..8]
PD+[1..8]
PD-[1..8]
CHI+[9..16]
CHI-[9..16]
PD+[9..16]
PD-[9..16]
CHI+[17..24]
CHI-[17..24]
PD+[17..24]
PD-[17..24]

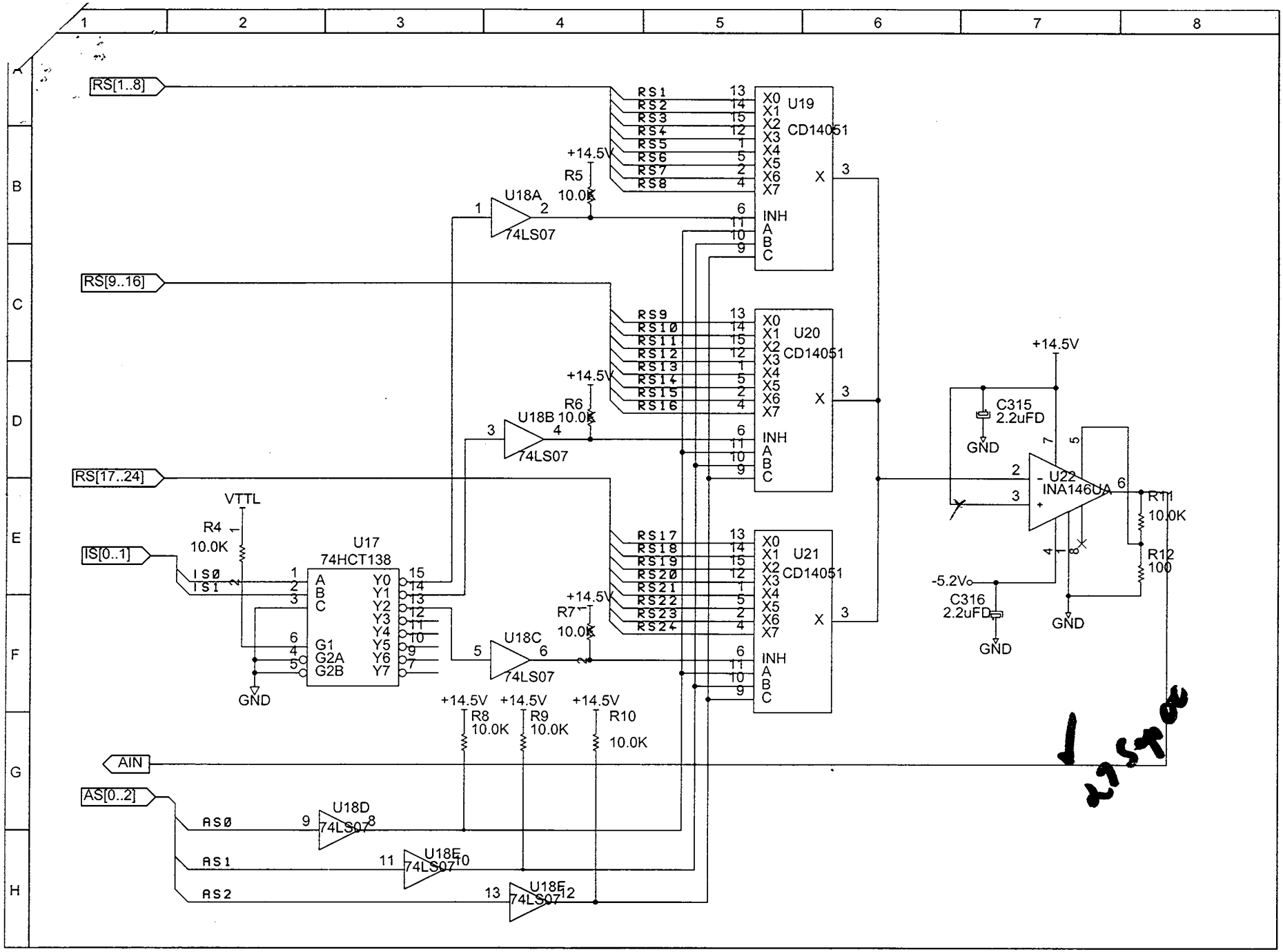
RS[1..8]
RS[9..16]
RS[17..24]
IS[0..1]
AIN
AS[0..2]
U19
CD14051
U20
CD14051
U21
CD14051
U18A
74LS07
U18B
74LS07
U18C
74LS07
U18D
74LS07
U18E
74LS07
U18E
74LS07
U17
74HCT138
VTTL
R4
10.0K
R5
10.0K
R6
10.0K
R7
10.0K
R8
10.0K
R9
10.0K
R10
10.0K
+14.5V
GND
C315
2.2uFD
C316
2.2uFD
-5.2V
U22
INA146UA
R11
10.0K
R12
100

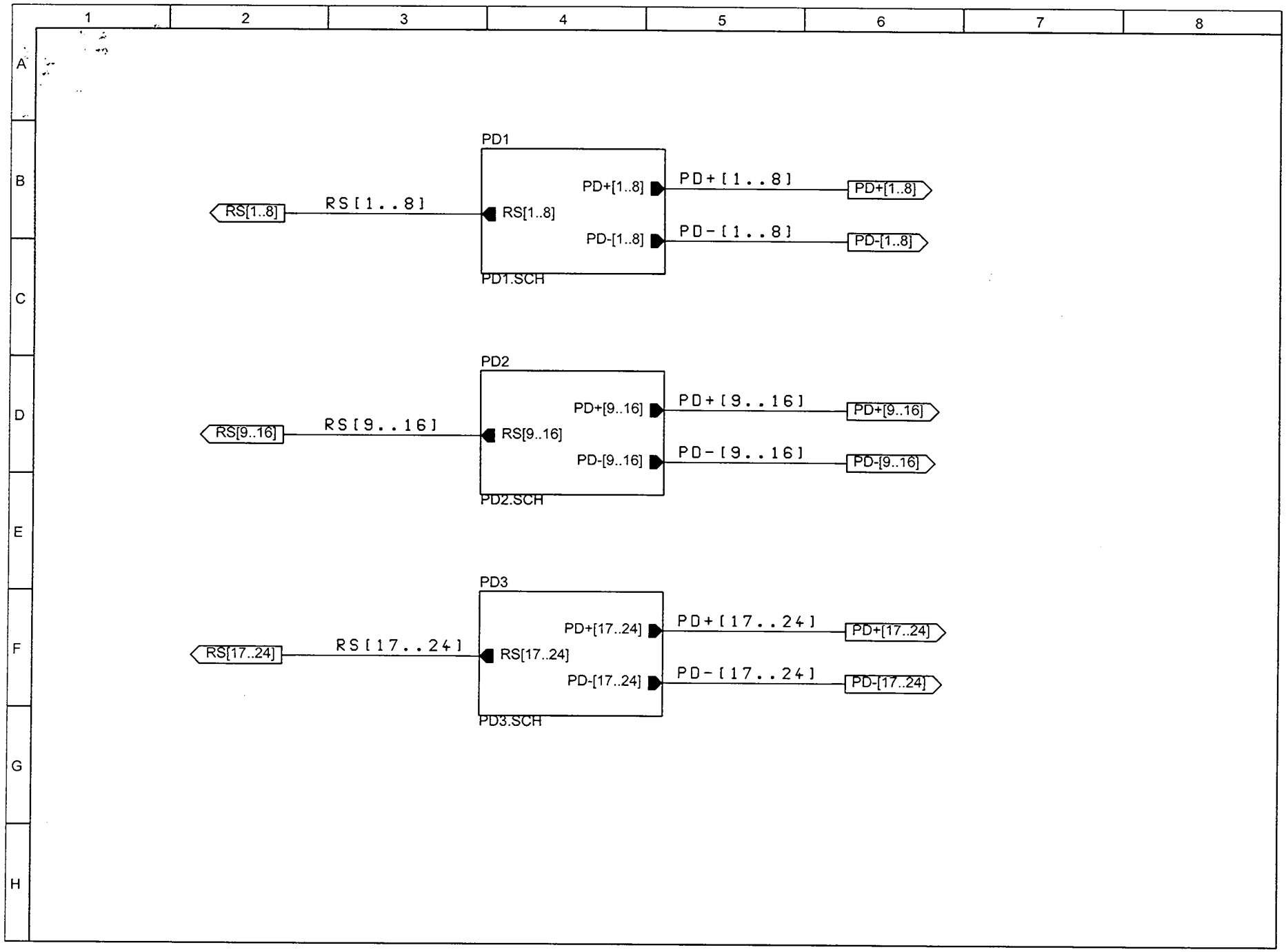
PD1
RS[1..8]
RS[1..8]
RS[1..8]
PD+[1..8]
PD-[1..8]
PD+[1..8]
PD-[1..8]
PD1.SCH
PD2
RS[9..16]
RS[9..16]
RS[9..16]
PD+[9..16]
PD-[9..16]
PD+[9..16]
PD-[9..16]
PD2.SCH
PD3
RS[17..24]
RS[17..24]
RS[17..24]
PD+[17..24]
PD-[17..24]
PD+[17..24]
PD-[17..24]
PD3.SCH

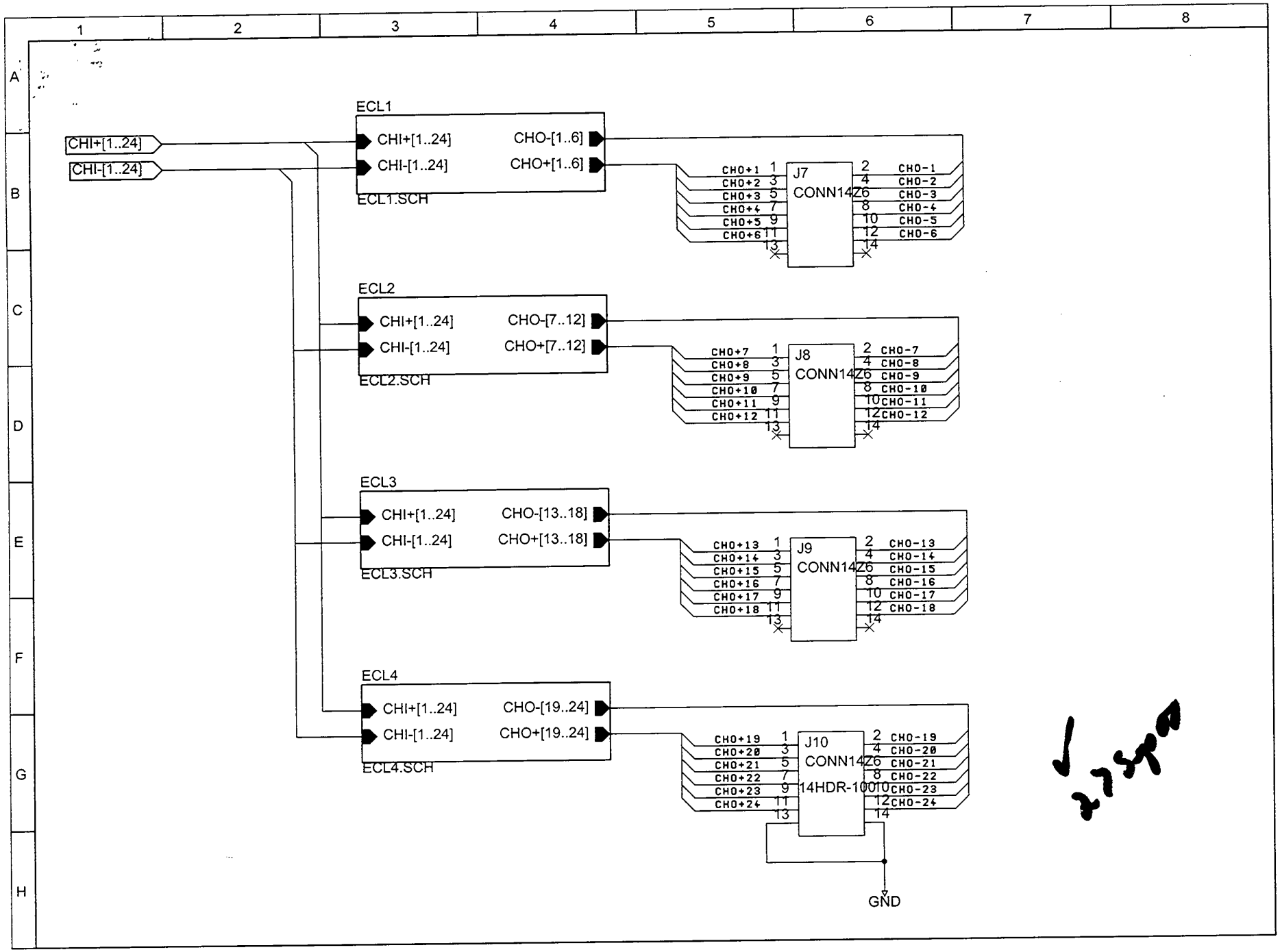
CHI+[1..24]
CHI-[1..24]
ECL1
CHI+[1..24]
CHI-[1..24]
CHO-[1..6]
CHO+[1..6]
ECL1.SCH
J7
CONN14Z6
CHO+1 CHO+2 CHO+3 CHO+4 CHO+5 CHO+6
CHO-1 CHO-2 CHO-3 CHO-4 CHO-5 CHO-6
ECL2
CHI+[1..24]
CHI-[1..24]
CHO-[7..12]
CHO+[7..12]
ECL2.SCH
J8
CONN14Z6
CHO+7 CHO+8 CHO+9 CHO+10 CHO+11 CHO+12
CHO-7 CHO-8 CHO-9 CHO-10 CHO-11 CHO-12
ECL3
CHI+[1..24]
CHI-[1..24]
CHO-[13..18]
CHO+[13..18]
ECL3.SCH
J9
CONN14Z6
CHO+13 CHO+14 CHO+15 CHO+16 CHO+17 CHO+18
CHO-13 CHO-14 CHO-15 CHO-16 CHO-17 CHO-18
ECL4
CHI+[1..24]
CHI-[1..24]
CHO-[19..24]
CHO+[19..24]
ECL4.SCH
J10
CONN14Z6
14HDR-100
CHO+19 CHO+20 CHO+21 CHO+22 CHO+23 CHO+24
CHO-19 CHO-20 CHO-21 CHO-22 CHO-23 CHO-24
GND

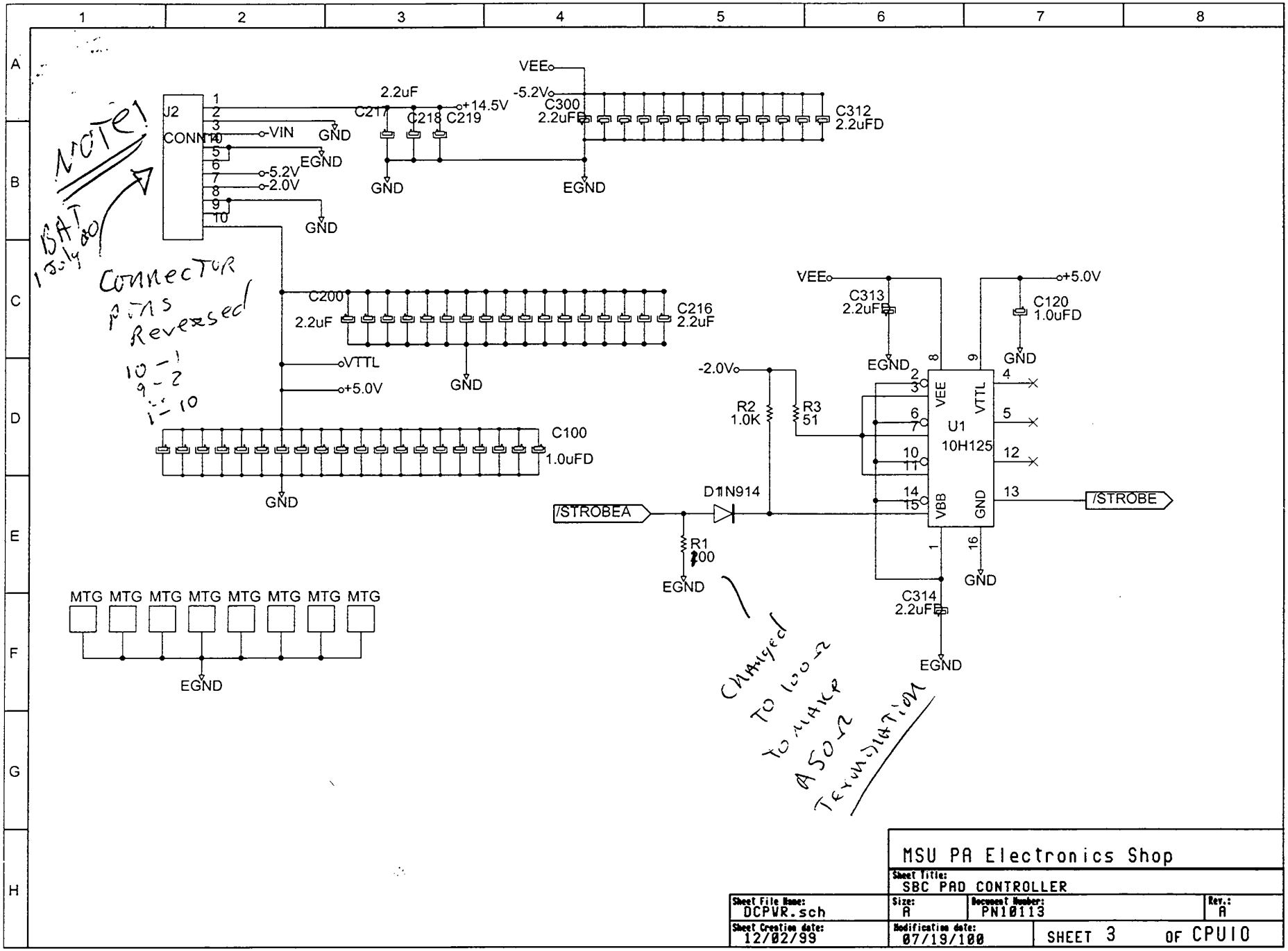


MSU PA Electronics Shop

| | | | |
|---|---|---|---|
| Sheet Title: SBC PAD CONTROLLER | | | |
| Sheet File Name: DCPWR.sch | Size: A | Document Number: PN10113 | Rev.: A |
| Sheet Creation date: 12/02/99 | Modification date: 07/19/100 | SHEET 3 | OF CPUIO |

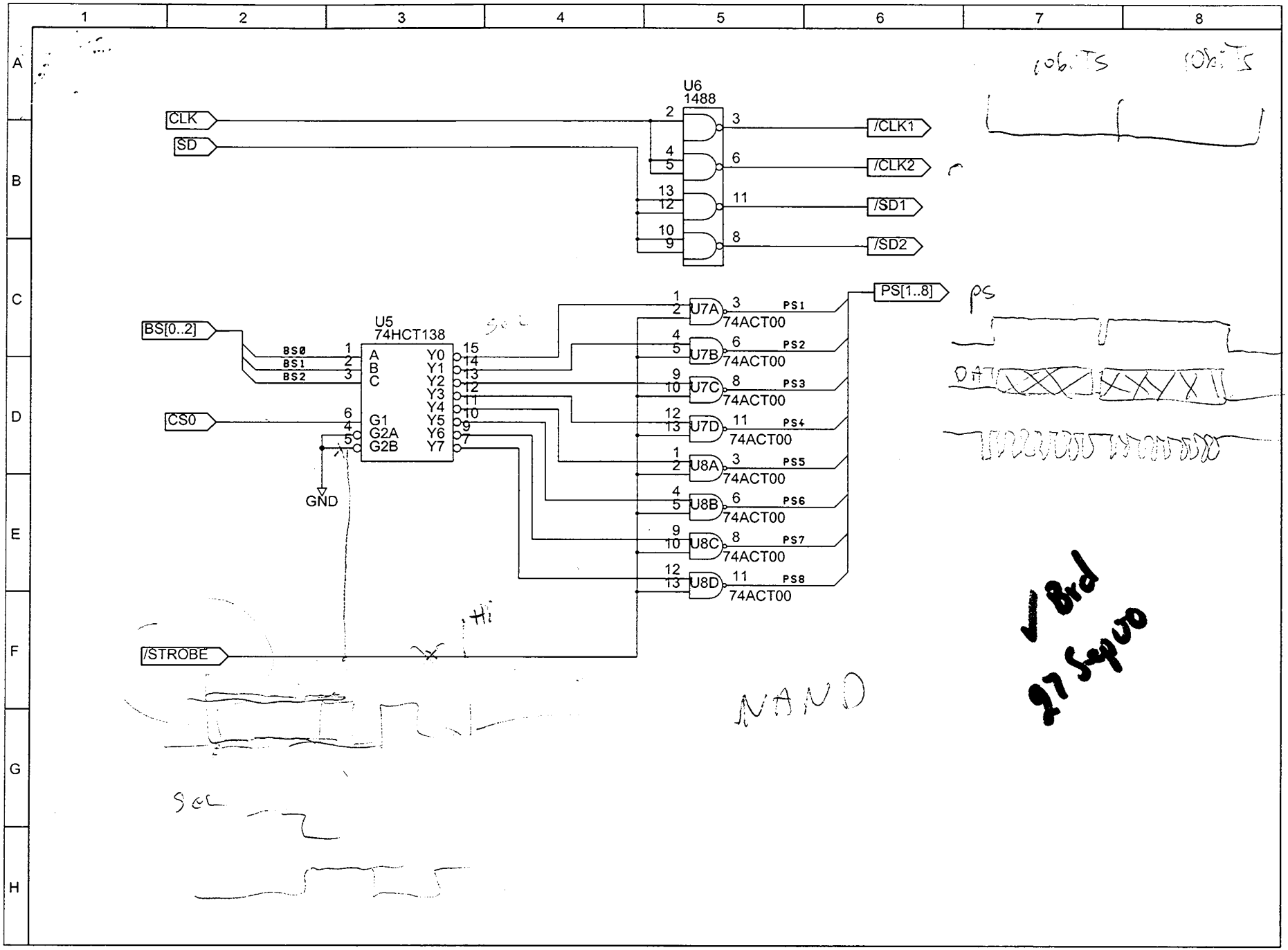
U6
1488
CLK
SD
/CLK1
/CLK2
/SD1
/SD2
U5
74HCT138
BS[0..2]
BS0
BS1
BS2
CS0
GND
/STROBE
A
B
C
G1
G2A
G2B
Y0
Y1
Y2
Y3
Y4
Y5
Y6
Y7
U7A
U7B
U7C
U7D
U8A
U8B
U8C
U8D
74ACT00
PS1
PS2
PS3
PS4
PS5
PS6
PS7
PS8
PS[1..8]
NAND
Brd
27 Sep 00

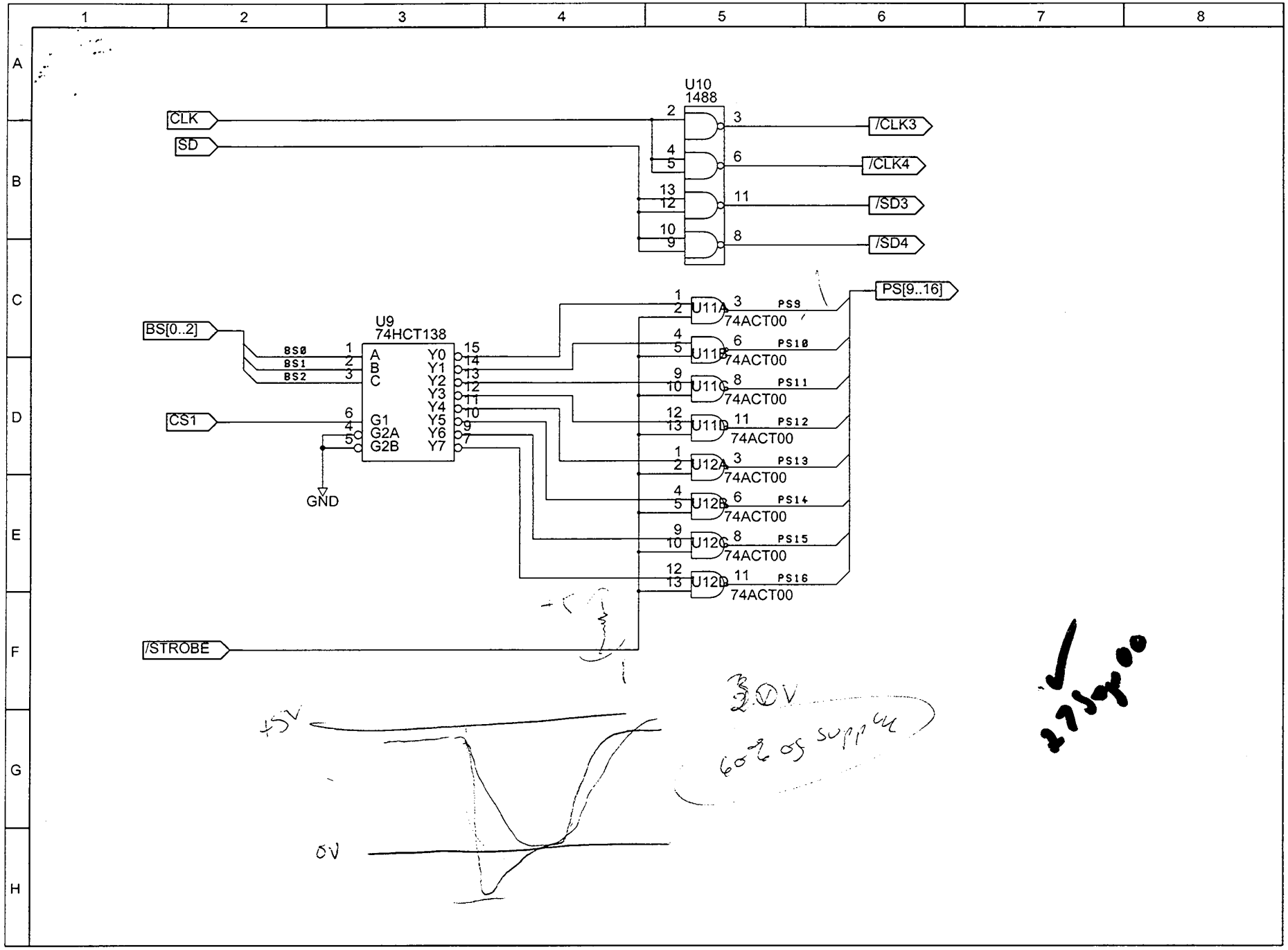
U10
1488
CLK
SD
/CLK3
/CLK4
/SD3
/SD4
PS[9..16]
BS[0..2]
BS0
BS1
BS2
U9
74HCT138
A
B
C
G1
G2A
G2B
Y0
Y1
Y2
Y3
Y4
Y5
Y6
Y7
CS1
GND
U11A
U11B
U11C
U11D
U12A
U12B
U12C
U12D
74ACT00
PS9
PS10
PS11
PS12
PS13
PS14
PS15
PS16
/STROBE
+5V
0V
3.0V
60% of supply

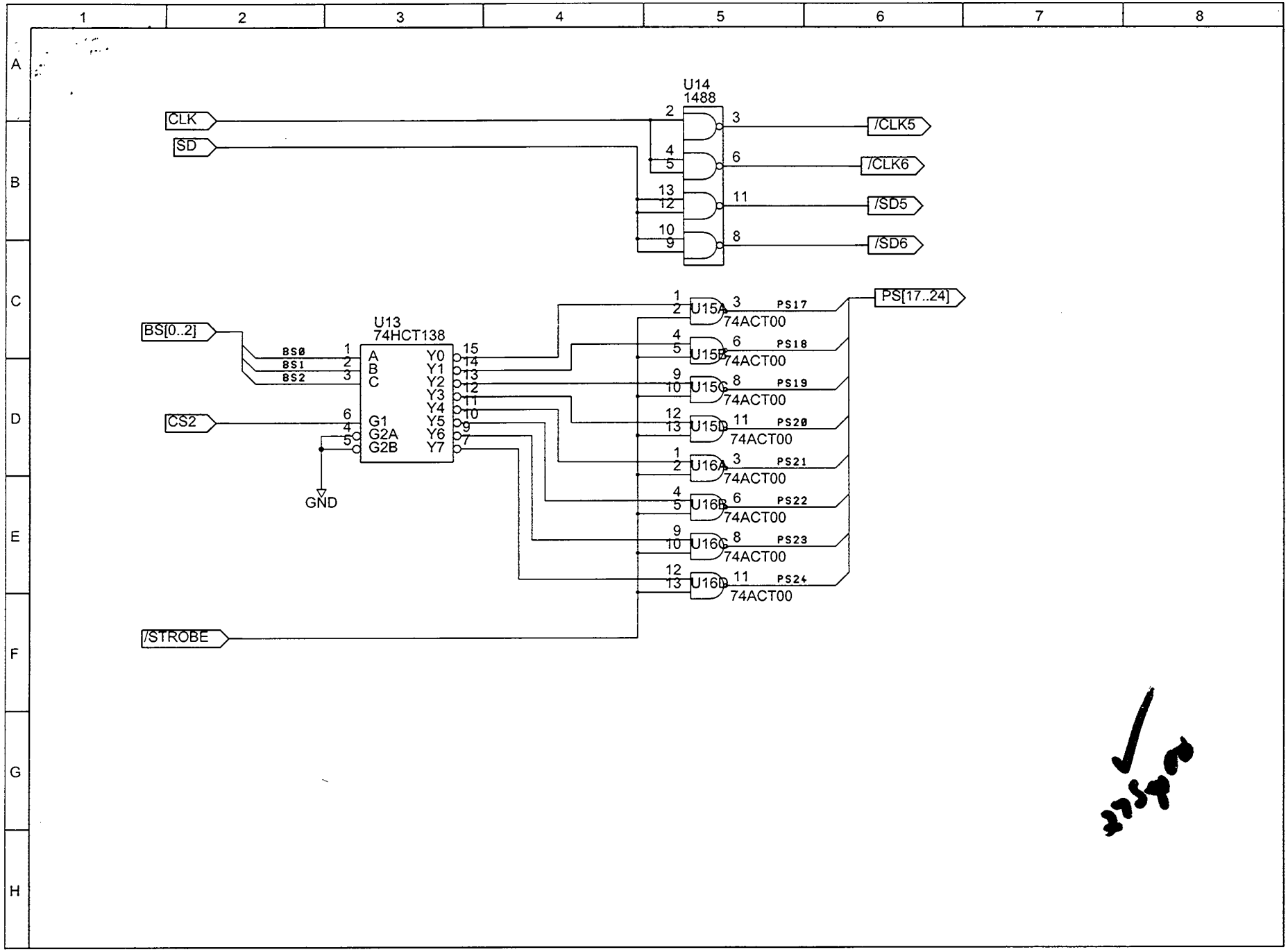
U14
1488
CLK
SD
/CLK5
/CLK6
/SD5
/SD6
U13
74HCT138
BS[0..2]
BS0
BS1
BS2
CS2
GND
A
B
C
G1
G2A
G2B
Y0
Y1
Y2
Y3
Y4
Y5
Y6
Y7
U15A
U15B
U15C
U15D
U16A
U16B
U16C
U16D
74ACT00
PS17
PS18
PS19
PS20
PS21
PS22
PS23
PS24
PS[17..24]
/STROBE

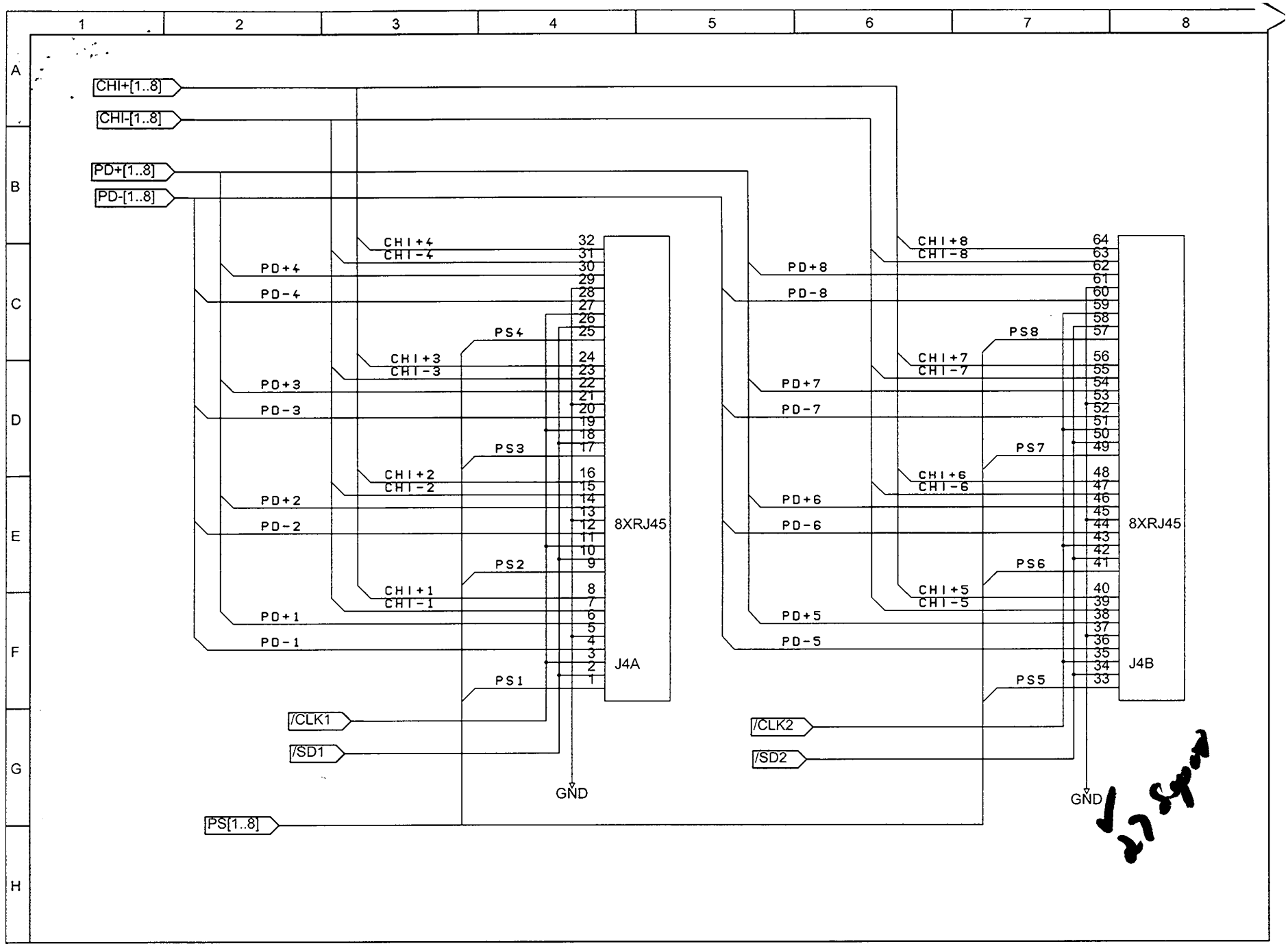
CHI+[1..8]
CHI-[1..8]
PD+[1..8]
PD-[1..8]
PS[1..8]
/CLK1
/SD1
/CLK2
/SD2
8XRJ45
J4A
8XRJ45
J4B
GND
GND
CHI+4
CHI-4
PD+4
PD-4
PS4
CHI+3
CHI-3
PD+3
PD-3
PS3
CHI+2
CHI-2
PD+2
PD-2
PS2
CHI+1
CHI-1
PD+1
PD-1
PS1
CHI+8
CHI-8
PD+8
PD-8
PS8
CHI+7
CHI-7
PD+7
PD-7
PS7
CHI+6
CHI-6
PD+6
PD-6
PS6
CHI+5
CHI-5
PD+5
PD-5
PS5

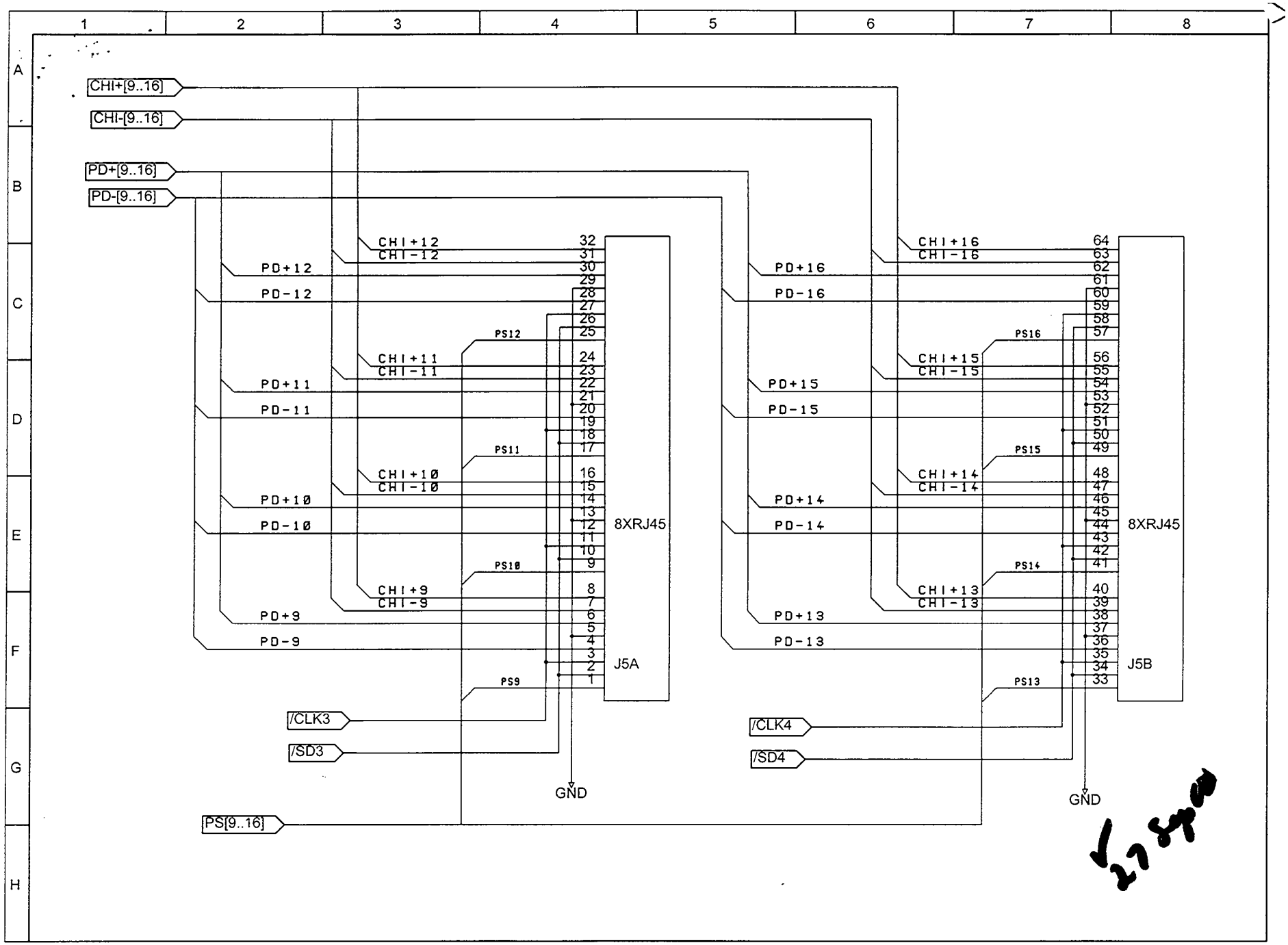
CHI+[9..16]
CHI-[9..16]
PD+[9..16]
PD-[9..16]
CHI+12
CHI-12
PD+12
PD-12
PS12
CHI+11
CHI-11
PD+11
PD-11
PS11
CHI+10
CHI-10
PD+10
PD-10
PS10
CHI+9
CHI-9
PD+9
PD-9
PS9
8XRJ45
J5A
/CLK3
/SD3
GND
PS[9..16]
CHI+16
CHI-16
PD+16
PD-16
PS16
CHI+15
CHI-15
PD+15
PD-15
PS15
CHI+14
CHI-14
PD+14
PD-14
PS14
CHI+13
CHI-13
PD+13
PD-13
PS13
8XRJ45
J5B
/CLK4
/SD4
GND

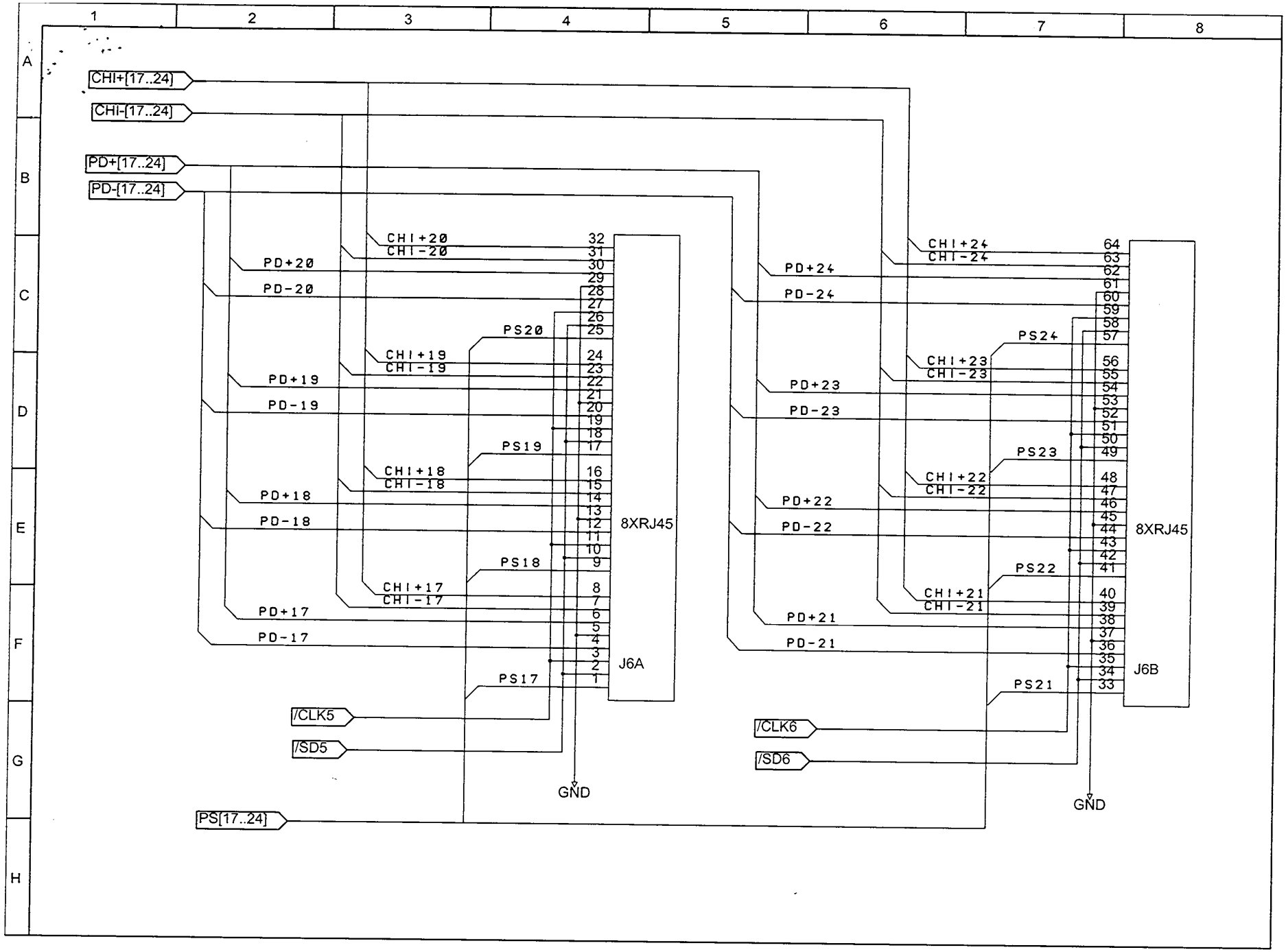
CHI+[17..24]
CHI-[17..24]
PD+[17..24]
PD-[17..24]
PS[17..24]
/CLK5
/SD5
/CLK6
/SD6
GND
GND
8XRJ45
J6A
8XRJ45
J6B
CHI+20
CHI-20
PD+20
PD-20
PS20
CHI+19
CHI-19
PD+19
PD-19
PS19
CHI+18
CHI-18
PD+18
PD-18
PS18
CHI+17
CHI-17
PD+17
PD-17
PS17
CHI+24
CHI-24
PD+24
PD-24
PS24
CHI+23
CHI-23
PD+23
PD-23
PS23
CHI+22
CHI-22
PD+22
PD-22
PS22
CHI+21
CHI-21
PD+21
PD-21
PS21

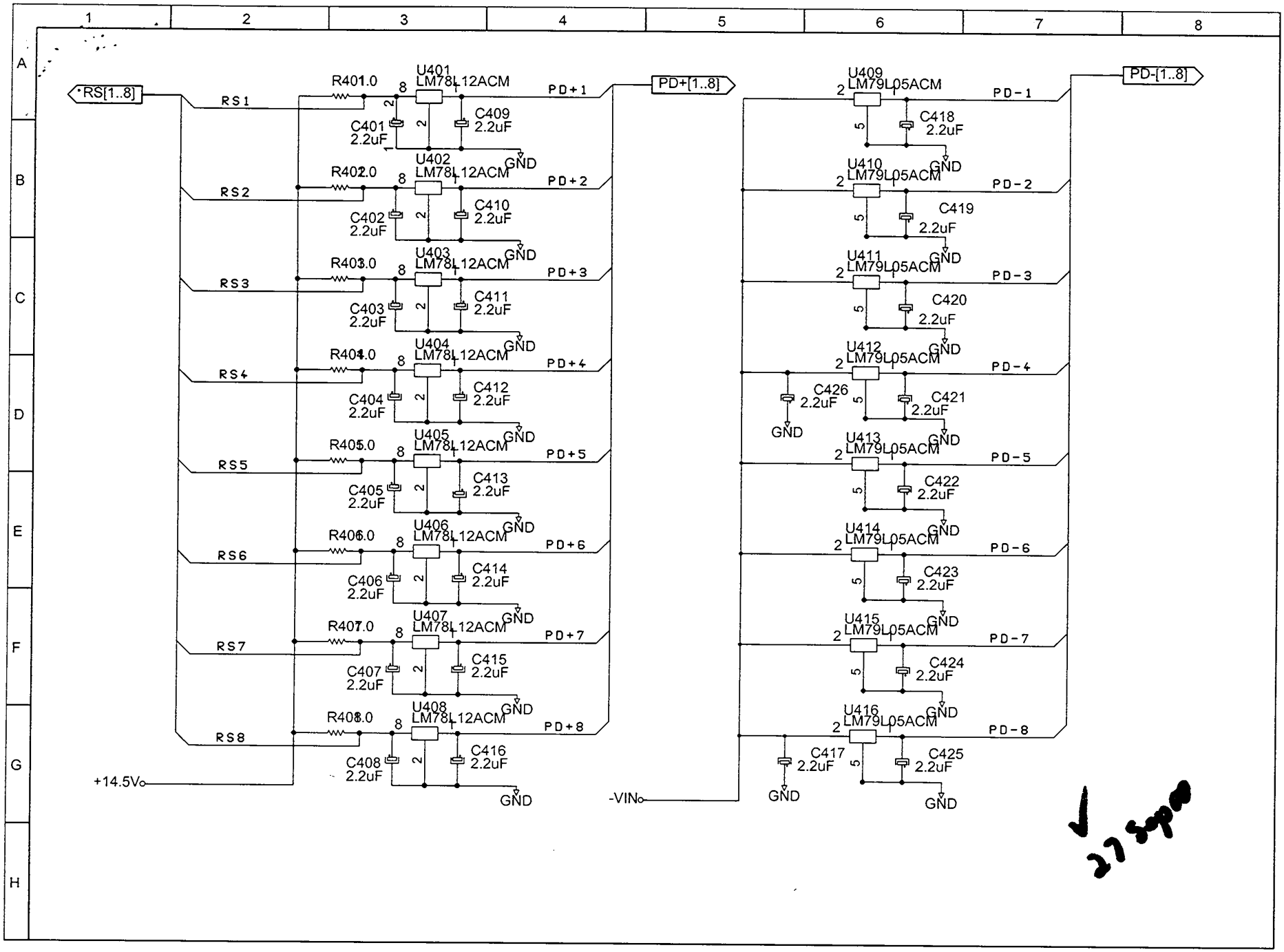
RS[1..8]
RS1
RS2
RS3
RS4
RS5
RS6
RS7
RS8
R401 1.0
R402 2.0
R403 3.0
R404 4.0
R405 5.0
R406 6.0
R407 7.0
R408 8.0
U401 LM78L12ACM
U402 LM78L12ACM
U403 LM78L12ACM
U404 LM78L12ACM
U405 LM78L12ACM
U406 LM78L12ACM
U407 LM78L12ACM
U408 LM78L12ACM
C401 2.2uF
C402 2.2uF
C403 2.2uF
C404 2.2uF
C405 2.2uF
C406 2.2uF
C407 2.2uF
C408 2.2uF
C409 2.2uF
C410 2.2uF
C411 2.2uF
C412 2.2uF
C413 2.2uF
C414 2.2uF
C415 2.2uF
C416 2.2uF
PD+1
PD+2
PD+3
PD+4
PD+5
PD+6
PD+7
PD+8
PD+[1..8]
GND
+14.5V
-VIN
U409 LM79L05ACM
U410 LM79L05ACM
U411 LM79L05ACM
U412 LM79L05ACM
U413 LM79L05ACM
U414 LM79L05ACM
U415 LM79L05ACM
U416 LM79L05ACM
C418 2.2uF
C419 2.2uF
C420 2.2uF
C421 2.2uF
C422 2.2uF
C423 2.2uF
C424 2.2uF
C425 2.2uF
C426 2.2uF
C417 2.2uF
PD-1
PD-2
PD-3
PD-4
PD-5
PD-6
PD-7
PD-8
PD-[1..8]

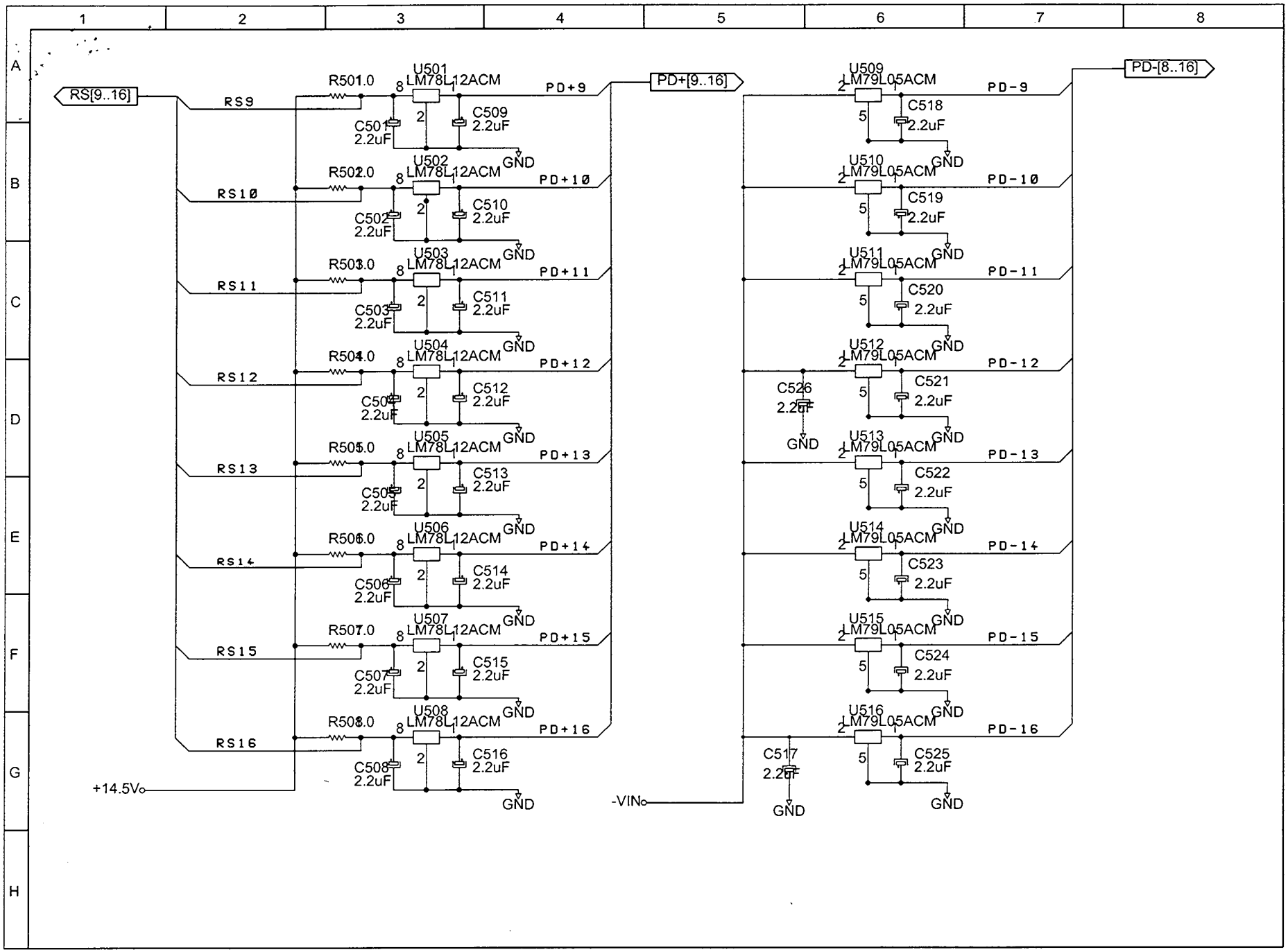
RS[9..16]
PD+[9..16]
PD-[8..16]
+14.5V
-VIN
GND
U501 LM78L12ACM
U502 LM78L12ACM
U503 LM78L12ACM
U504 LM78L12ACM
U505 LM78L12ACM
U506 LM78L12ACM
U507 LM78L12ACM
U508 LM78L12ACM
U509 LM79L05ACM
U510 LM79L05ACM
U511 LM79L05ACM
U512 LM79L05ACM
U513 LM79L05ACM
U514 LM79L05ACM
U515 LM79L05ACM
U516 LM79L05ACM
R501 1.0
R502 2.0
R503 3.0
R504 4.0
R505 5.0
R506 6.0
R507 7.0
R508 8.0
RS9
RS10
RS11
RS12
RS13
RS14
RS15
RS16
PD+9
PD+10
PD+11
PD+12
PD+13
PD+14
PD+15
PD+16
PD-9
PD-10
PD-11
PD-12
PD-13
PD-14
PD-15
PD-16
C501 2.2uF
C502 2.2uF
C503 2.2uF
C504 2.2uF
C505 2.2uF
C506 2.2uF
C507 2.2uF
C508 2.2uF
C509 2.2uF
C510 2.2uF
C511 2.2uF
C512 2.2uF
C513 2.2uF
C514 2.2uF
C515 2.2uF
C516 2.2uF
C517 2.2uF
C518 2.2uF
C519 2.2uF
C520 2.2uF
C521 2.2uF
C522 2.2uF
C523 2.2uF
C524 2.2uF
C525 2.2uF
C526 2.2uF

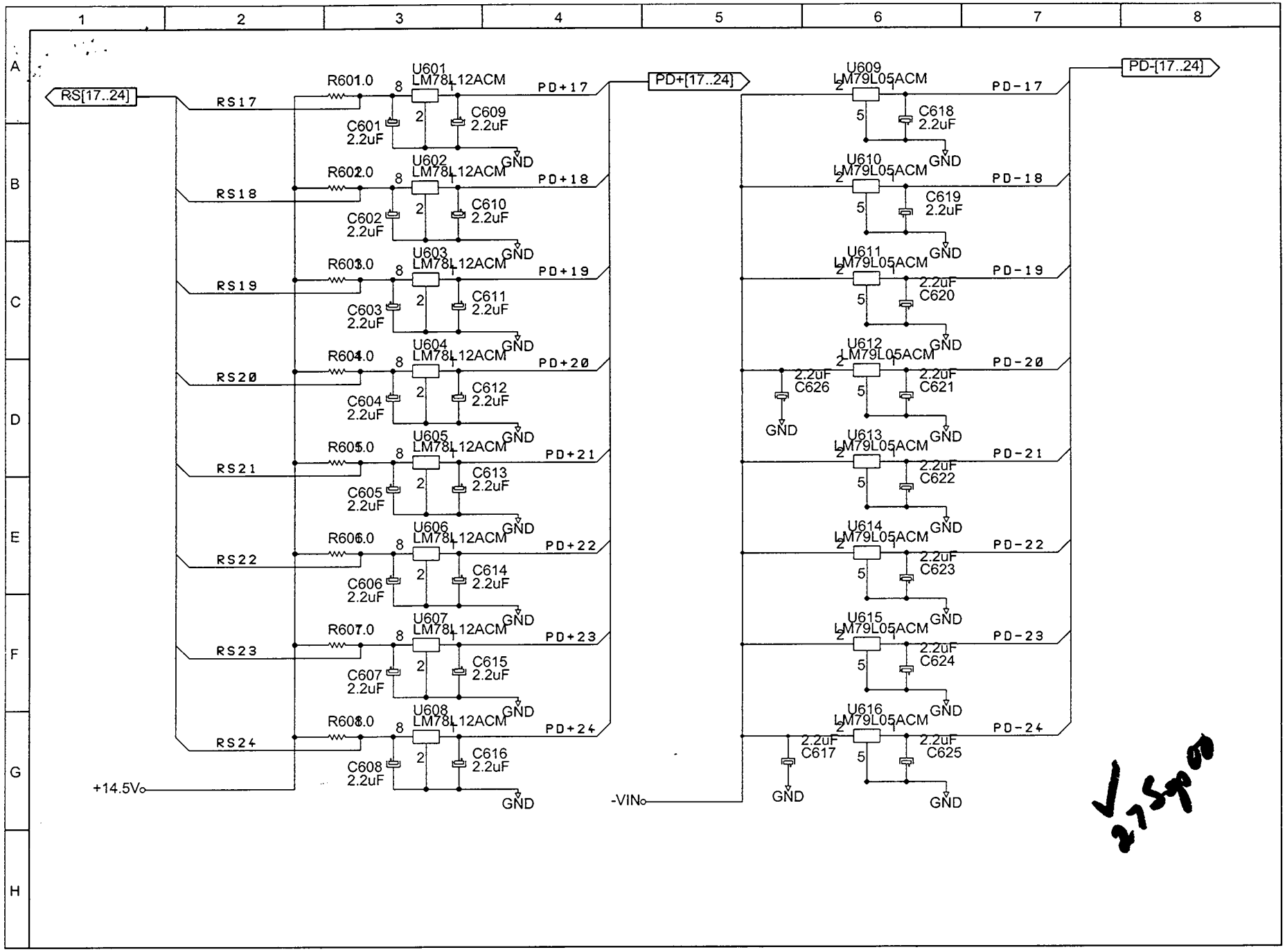
RS[17..24]
PD+[17..24]
PD-[17..24]
+14.5V
-VIN
GND
RS17
RS18
RS19
RS20
RS21
RS22
RS23
RS24
R601 1.0
R602 1.0
R603 1.0
R604 1.0
R605 1.0
R606 1.0
R607 1.0
R608 1.0
U601 LM78L12ACM
U602 LM78L12ACM
U603 LM78L12ACM
U604 LM78L12ACM
U605 LM78L12ACM
U606 LM78L12ACM
U607 LM78L12ACM
U608 LM78L12ACM
C601 2.2uF
C602 2.2uF
C603 2.2uF
C604 2.2uF
C605 2.2uF
C606 2.2uF
C607 2.2uF
C608 2.2uF
C609 2.2uF
C610 2.2uF
C611 2.2uF
C612 2.2uF
C613 2.2uF
C614 2.2uF
C615 2.2uF
C616 2.2uF
PD+17
PD+18
PD+19
PD+20
PD+21
PD+22
PD+23
PD+24
U609 LM79L05ACM
U610 LM79L05ACM
U611 LM79L05ACM
U612 LM79L05ACM
U613 LM79L05ACM
U614 LM79L05ACM
U615 LM79L05ACM
U616 LM79L05ACM
C618 2.2uF
C619 2.2uF
C620 2.2uF
C621 2.2uF
C622 2.2uF
C623 2.2uF
C624 2.2uF
C625 2.2uF
C626 2.2uF
C617 2.2uF
PD-17
PD-18
PD-19
PD-20
PD-21
PD-22
PD-23
PD-24

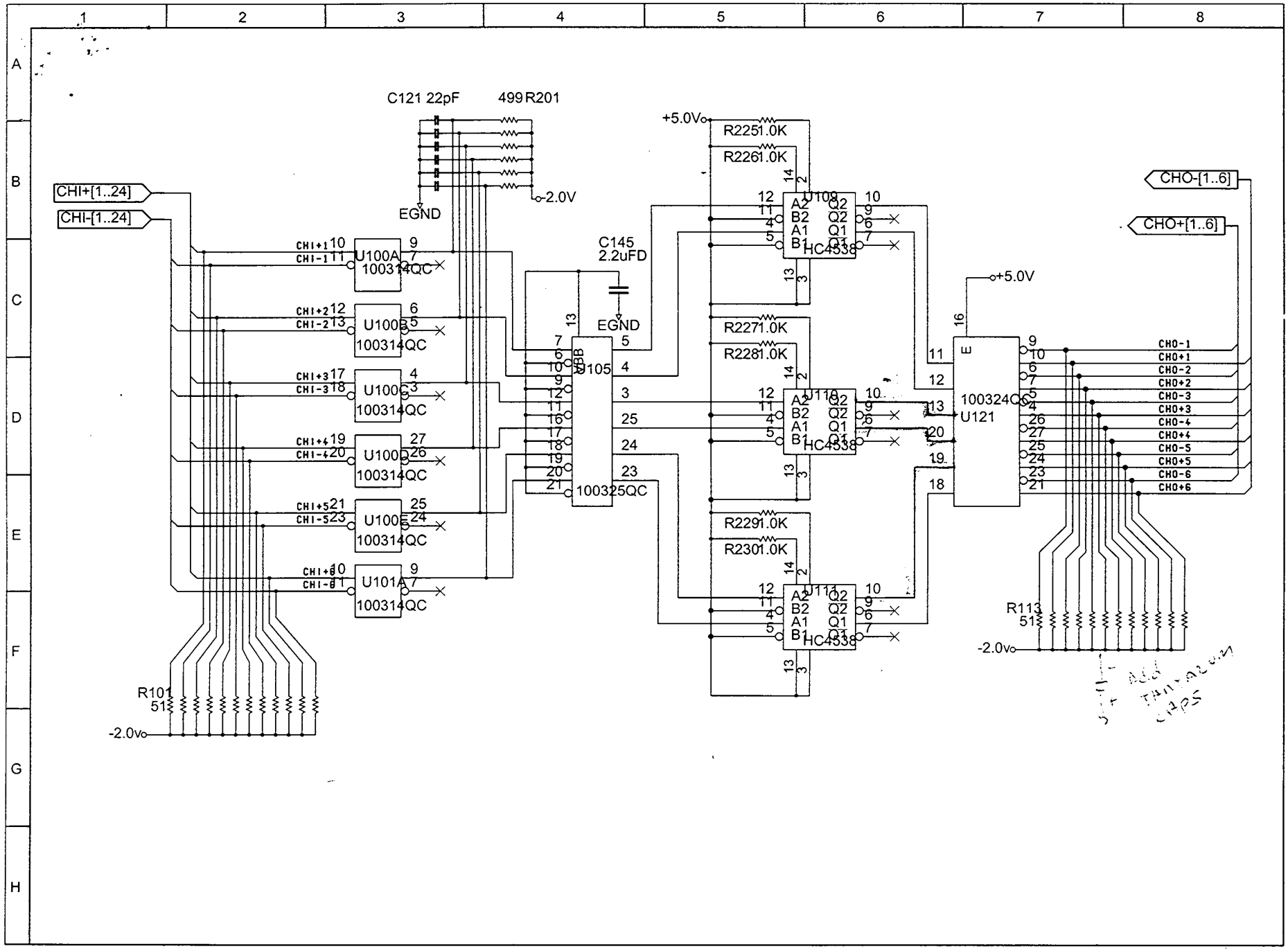
CHI+[1..24]
CHI-[1..24]
C121 22pF
499 R201
EGND
-2.0V
U100A 100314QC
U100B 100314QC
U100C 100314QC
U100D 100314QC
U100E 100314QC
U101A 100314QC
R101 51
-2.0V
C145 2.2uFD
EGND
U105 100325QC
+5.0V
R225 1.0K
R226 1.0K
R227 1.0K
R228 1.0K
R229 1.0K
R230 1.0K
U109 HC4538
U110 HC4538
U114 HC4538
U121 100324QC
+5.0V
CHO-[1..6]
CHO+[1..6]
R113 51
-2.0V

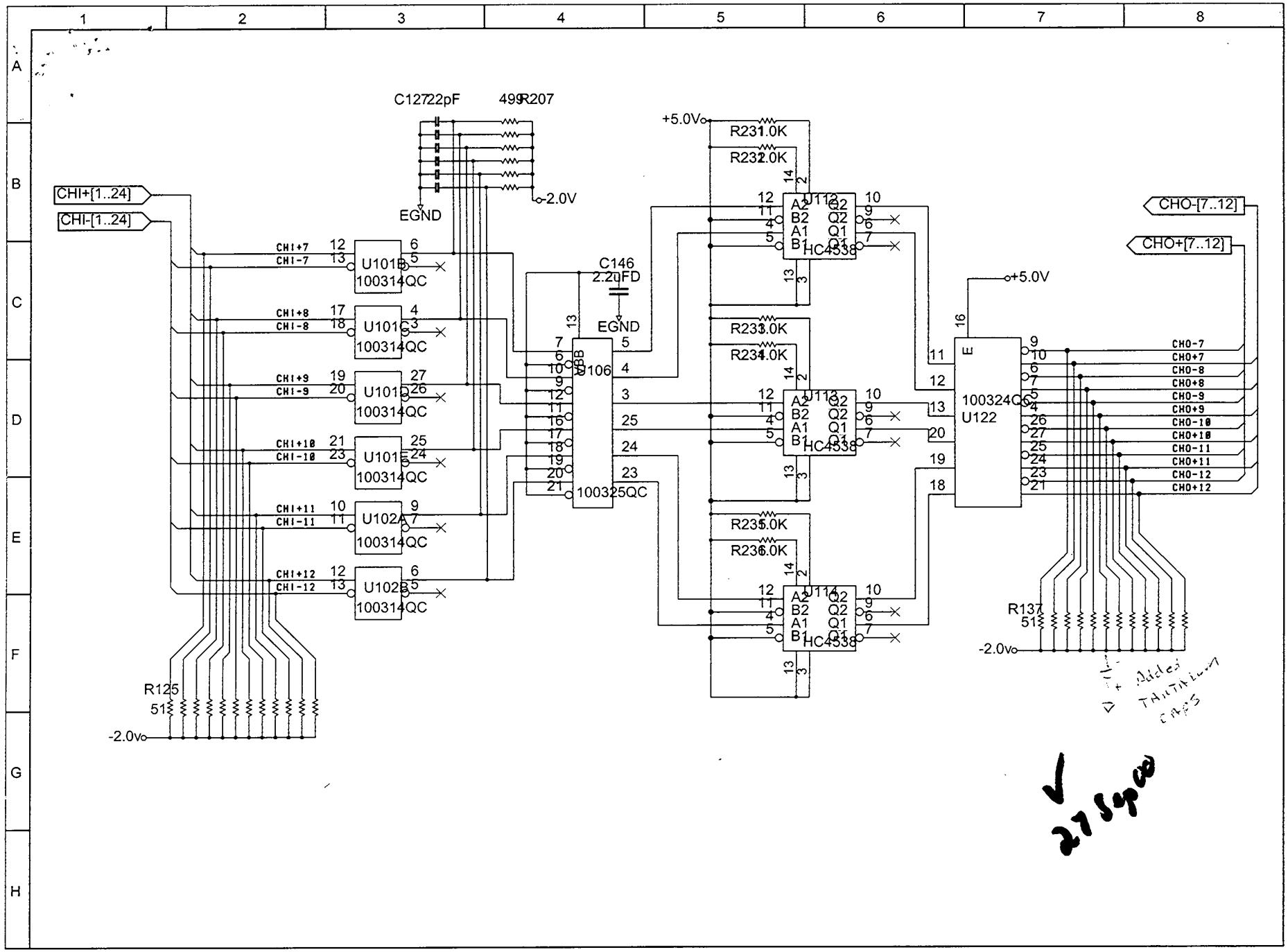
C127 22pF
499 R207
-2.0V
EGND
CHI+[1..24]
CHI-[1..24]
CHI+7
CHI-7
CHI+8
CHI-8
CHI+9
CHI-9
CHI+10
CHI-10
CHI+11
CHI-11
CHI+12
CHI-12
U101B
U101C
U101D
U101E
U102A
U102B
100314QC
R125
51
-2.0V
C146
2.20FD
EGND
U106
100325QC
+5.0V
R231 1.0K
R232 2.0K
R233 3.0K
R234 4.0K
R235 5.0K
R236 6.0K
U112
U113
U114
HC4538
+5.0V
U122
100324QC
CHO-[7..12]
CHO+[7..12]
CHO-7
CHO+7
CHO-8
CHO+8
CHO-9
CHO+9
CHO-10
CHO+10
CHO-11
CHO+11
CHO-12
CHO+12
R137
51
-2.0V
Added TANTALUM CAPS
27 Spec

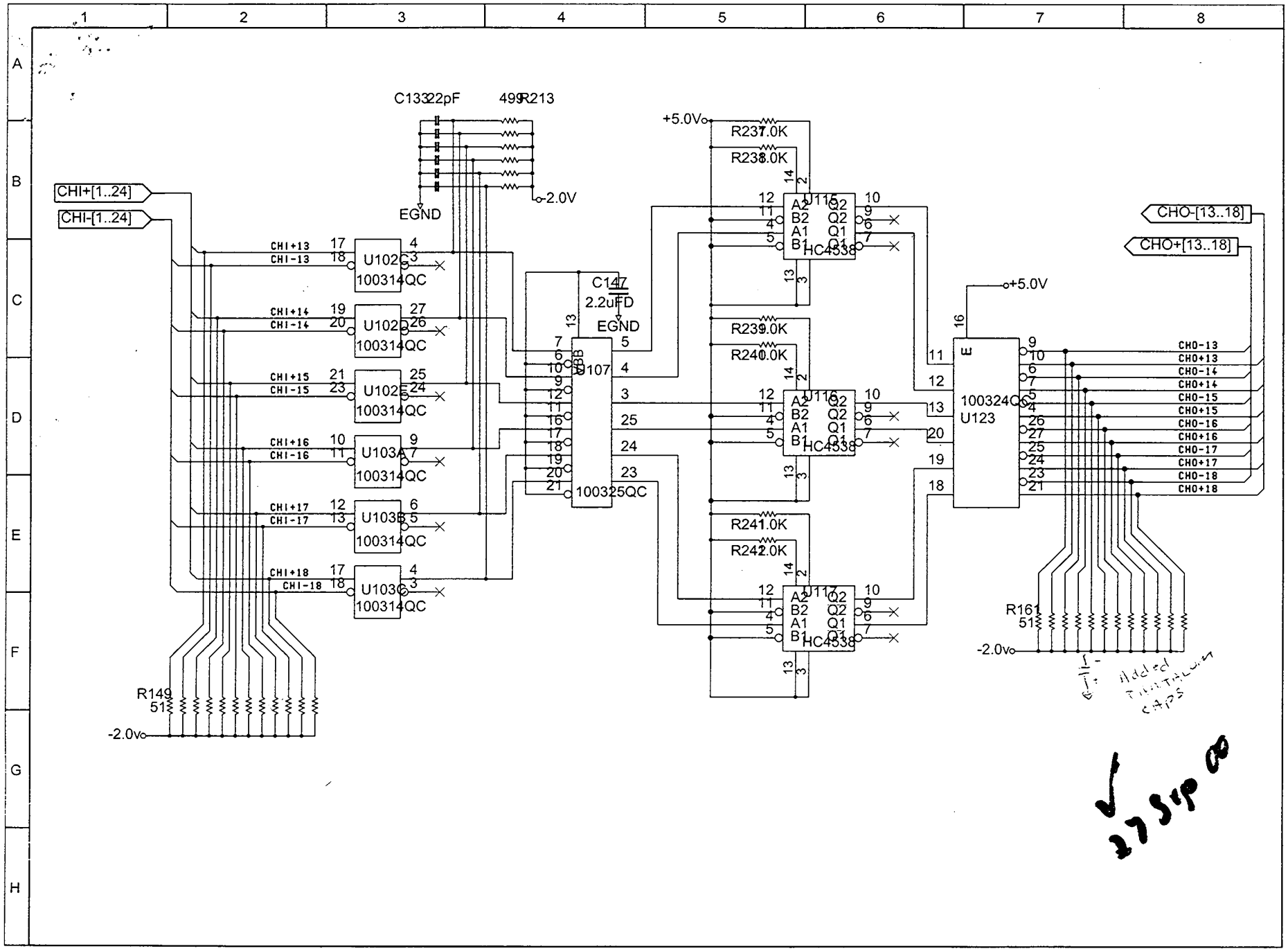
CHI+[1..24]
CHI-[1..24]
C133 22pF
499 R213
EGND
-2.0V
CHI+13
CHI-13
CHI+14
CHI-14
CHI+15
CHI-15
CHI+16
CHI-16
CHI+17
CHI-17
CHI+18
CHI-18
U102C
U102D
U102E
U103A
U103B
U103C
100314QC
R149
51
-2.0V
C147
2.2uFD
EGND
U107
100325QC
+5.0V
R237 7.0K
R238 8.0K
R239 9.0K
R240 10.0K
R241 11.0K
R242 12.0K
U115
U116
U117
HC4538
+5.0V
U123
100324QC
CHO-[13..18]
CHO+[13..18]
CHO-13
CHO+13
CHO-14
CHO+14
CHO-15
CHO+15
CHO-16
CHO+16
CHO-17
CHO+17
CHO-18
CHO+18
R161
51
-2.0V
Added termination caps
27 Sep 00

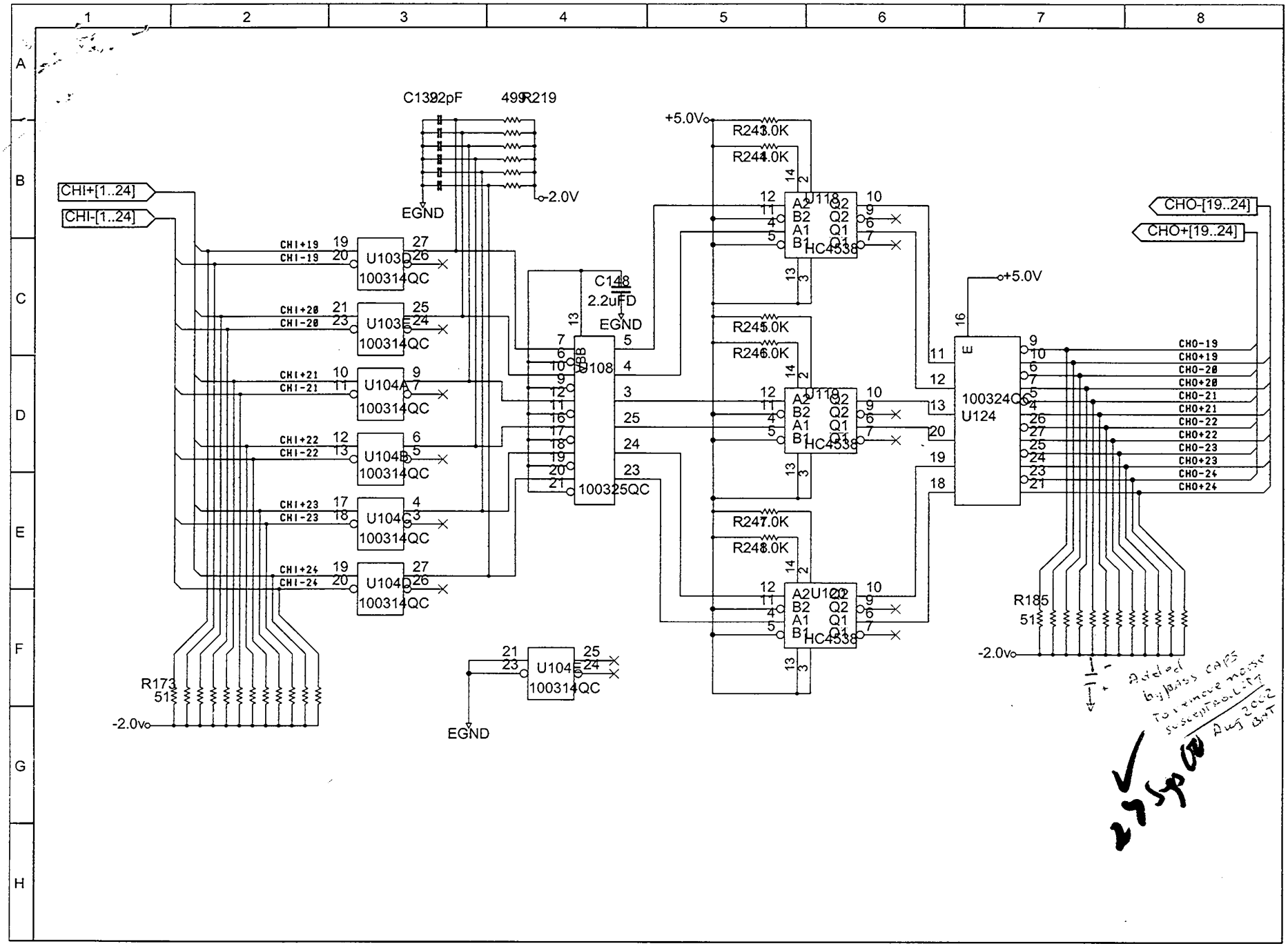

CHI+[1..24]
CHI-[1..24]
CHO-[19..24]
CHO+[19..24]
C139 2pF
499 R219
-2.0V
EGND
+5.0V
R243 1.0K
R244 1.0K
R245 1.0K
R246 1.0K
R247 1.0K
R248 1.0K
U118
U119
U120
HC4538
C148
2.2uFD
U108
100325QC
U103D
U103E
U104A
U104B
U104C
U104D
U104E
100314QC
U124
100324QC
R173
51
R185
51
CHI+19
CHI-19
CHI+20
CHI-20
CHI+21
CHI-21
CHI+22
CHI-22
CHI+23
CHI-23
CHI+24
CHI-24
CHO-19
CHO+19
CHO-20
CHO+20
CHO-21
CHO+21
CHO-22
CHO+22
CHO-23
CHO+23
CHO-24
CHO+24
Added bypass caps to remove noise susceptability Aug 2002 BAT
27 Sep 00

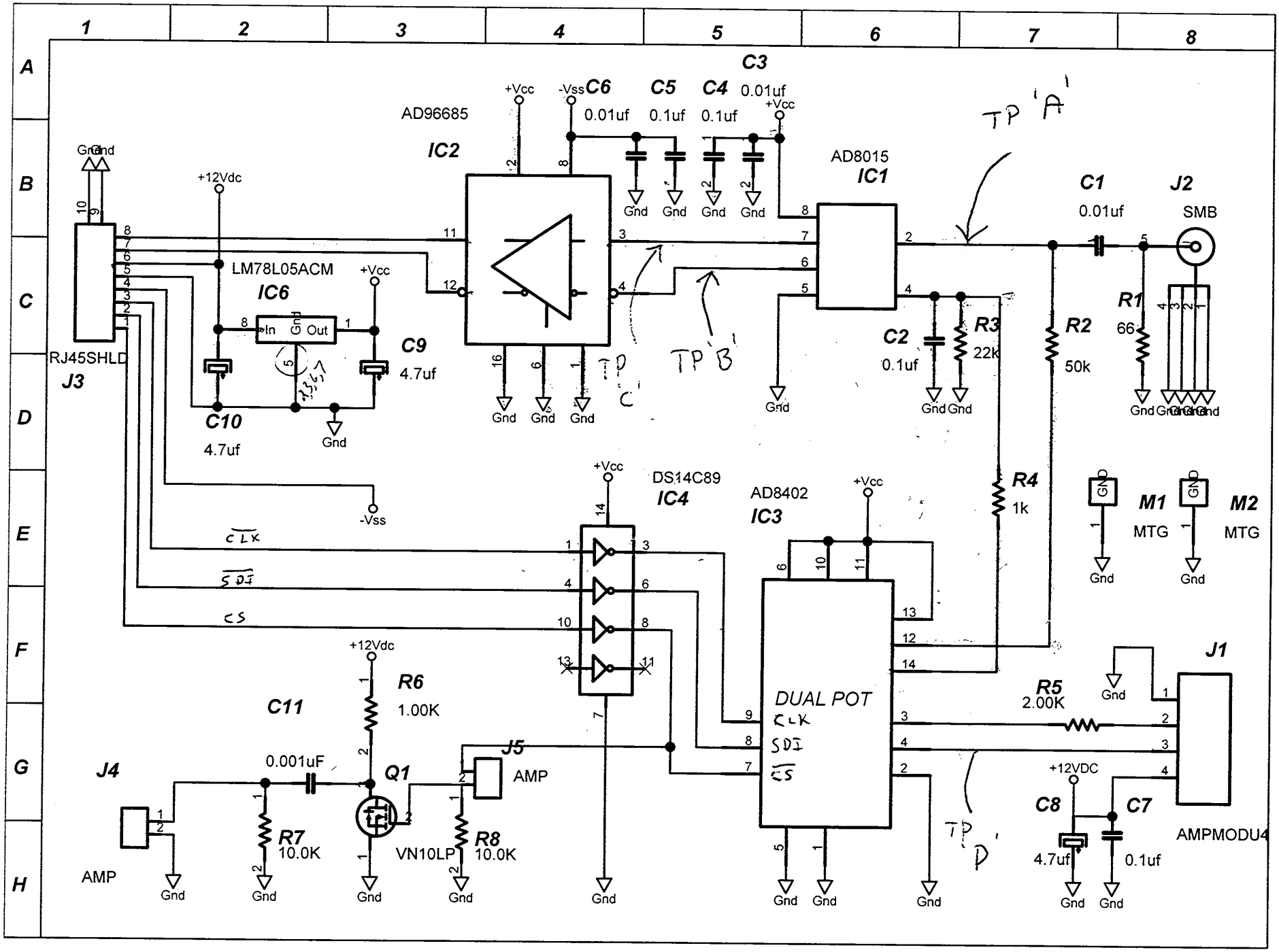
AD96685
IC2
+Vcc
-Vss
C6
0.01uf
C5
0.1uf
C4
0.1uf
C3
0.01uf
AD8015
IC1
TP 'A'
TP 'B'
TP 'C'
TP 'D'
C1
0.01uf
J2
SMB
R1
66
R2
50k
R3
22k
C2
0.1uf
R4
1k
M1
MTG
M2
MTG
J1
AMPMODU4
R5
2.00K
+12VDC
C8
4.7uf
C7
0.1uf
DUAL POT
CLK
SDI
CS
AD8402
IC3
DS14C89
IC4
+12Vdc
LM78L05ACM
IC6
In
Gnd
Out
C9
4.7uf
C10
4.7uf
RJ45SHLD
J3
R6
1.00K
C11
0.001uF
Q1
VN10LP
R7
10.0K
R8
10.0K
J4
AMP
J5
AMP
Gnd

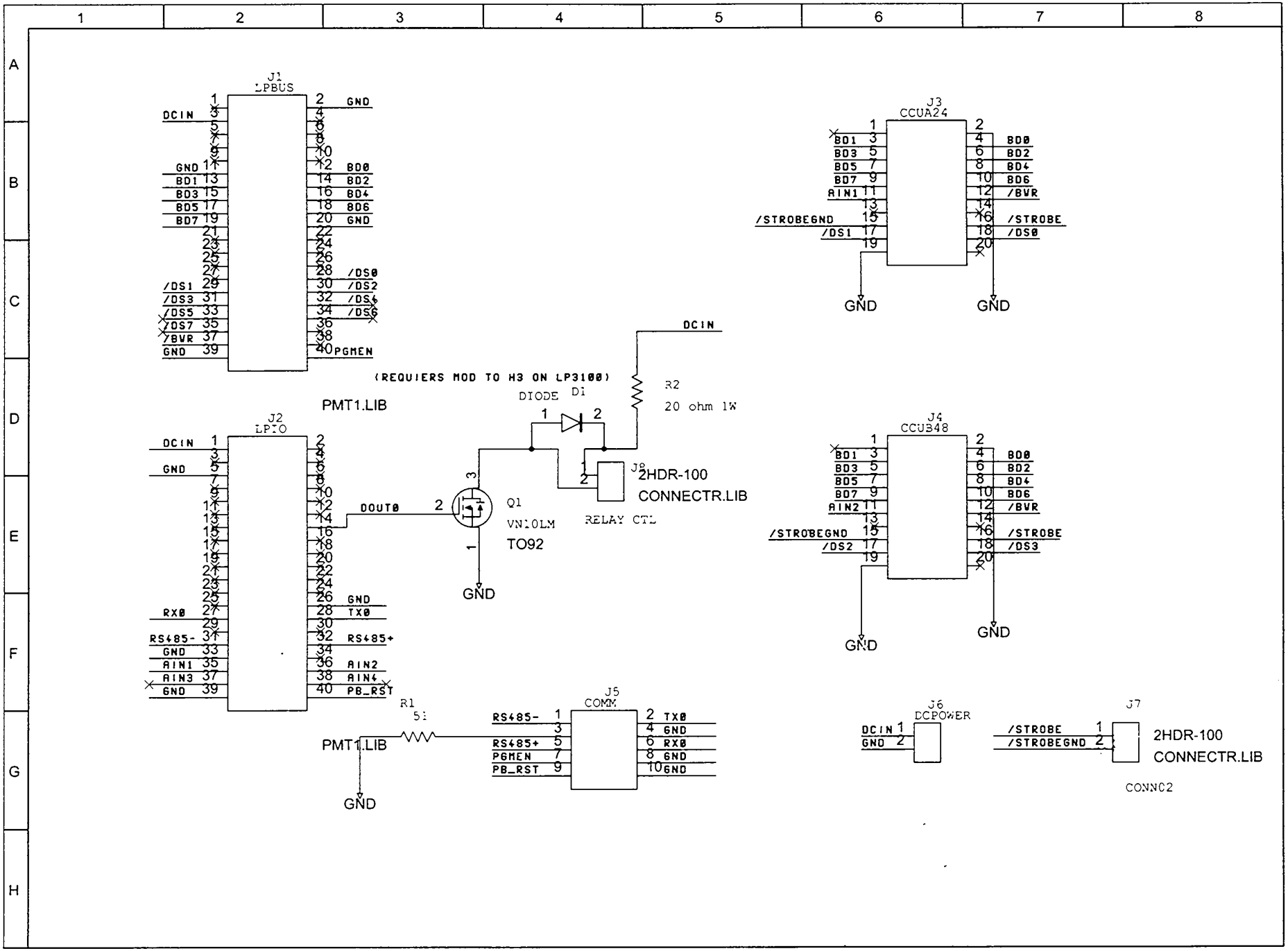
J1
LPBUS
DCIN
GND
BD1
BD3
BD5
BD7
/DS1
/DS3
/DS5
/DS7
/BVR
BD0
BD2
BD4
BD6
/DS0
/DS2
/DS4
/DS6
PGMEN
PMT1.LIB
J2
LPIO
DOUT0
RX0
TX0
RS485-
RS485+
AIN1
AIN2
AIN3
AIN4
PB_RST
(REQUIERS MOD TO H3 ON LP3100)
DIODE
D1
R2
20 ohm 1W
J8
2HDR-100
CONNECTR.LIB
RELAY CTL
Q1
VN10LM
TO92
J3
CCUA24
/STROBEGND
/STROBE
J4
CCUB48
/DS2
/DS3
R1
51
J5
COMM
J6
DCPOWER
J7
CONNC2

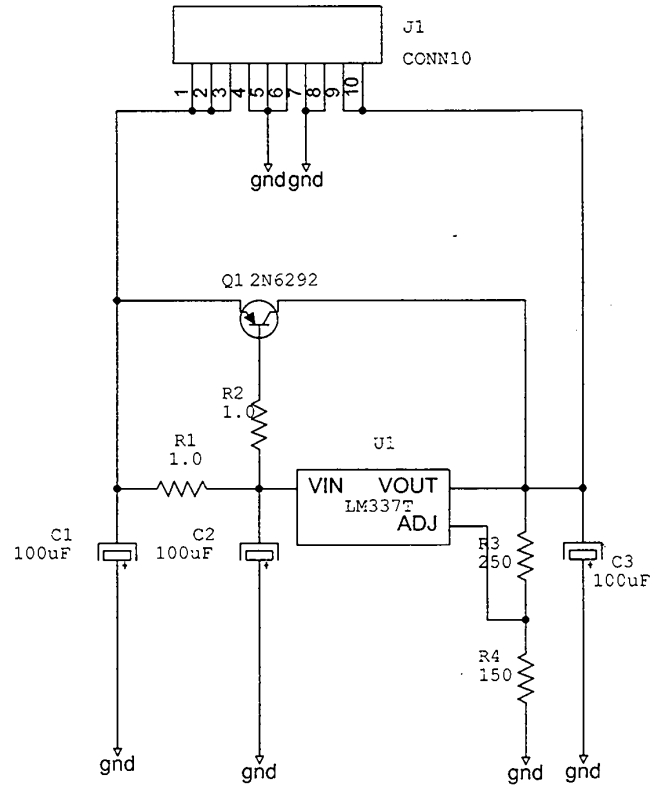
J1
CONN10
1
2
3
4
5
6
7
8
9
10
gnd
gnd
Q1 2N6292
R2
1.0
R1
1.0
U1
VIN
VOUT
LM337T
ADJ
C1
100uF
C2
100uF
R3
250
C3
100uF
R4
150
gnd
gnd
gnd
gnd

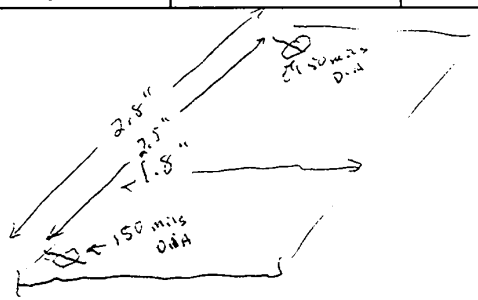
2.5"
2.5"
1.5"
150 mils
DIA

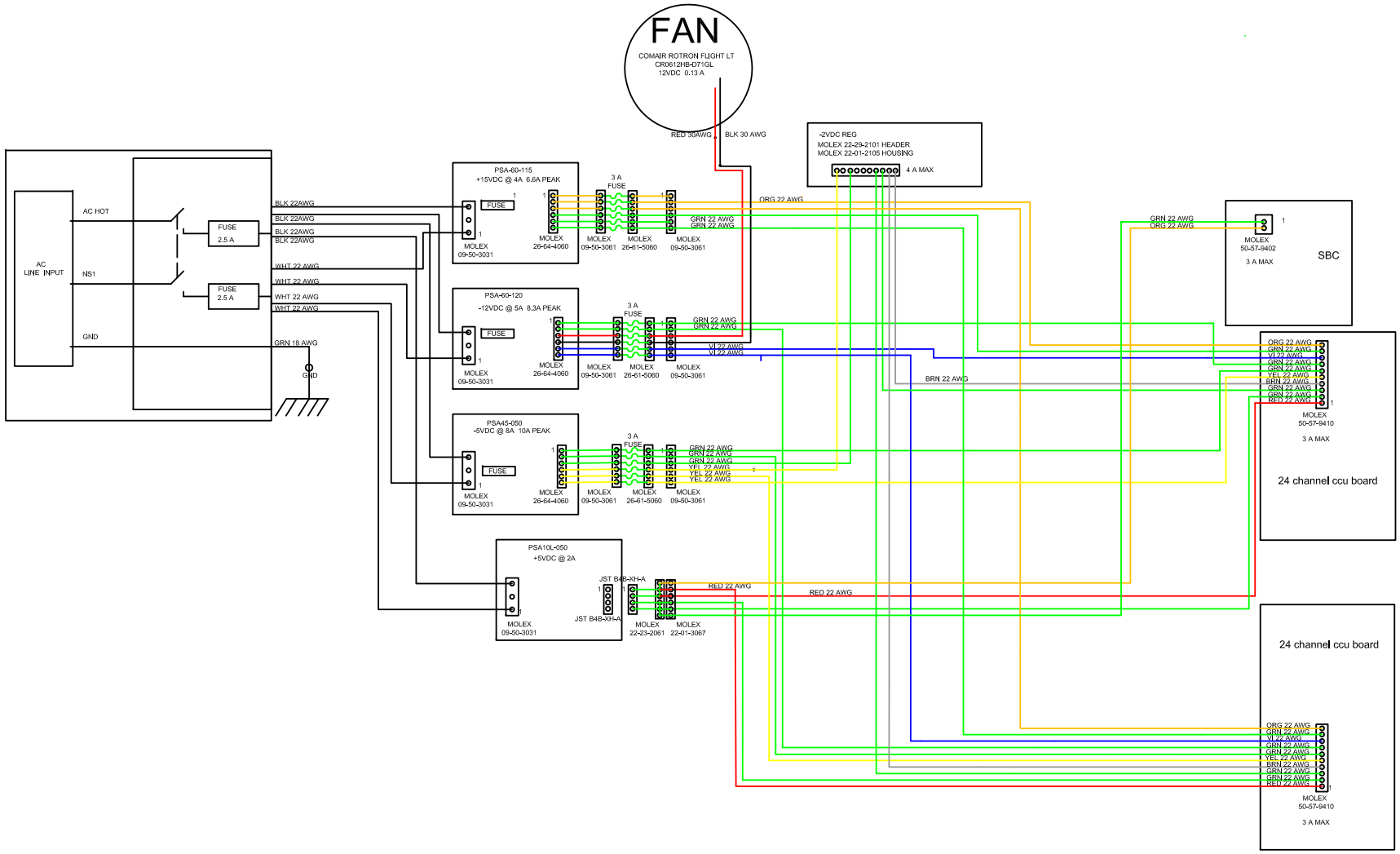


PARTS LIST

| | | |
|---|---|---|
| DRAWN BY | Mike Cherry | 06/17/2014 |
| CHECKED BY | Mike Cherry | 06/17/2014 |
| APPROVED BY | Mike Matulik | 06/17/2014 |
| MFG CO - | Mike Cherry | 06/17/2014 |

CCU box

FERMI NATIONAL ACCELERATOR LABORATORY
UNITED STATES DEPARTMENT OF ENERGY
PPD / EED / INFRASTRUCTURE GROUP

CCU 48 Channel Box
Power Wiring FIX

DRAWING NUMBER 176925 SHEET 1 OF 1