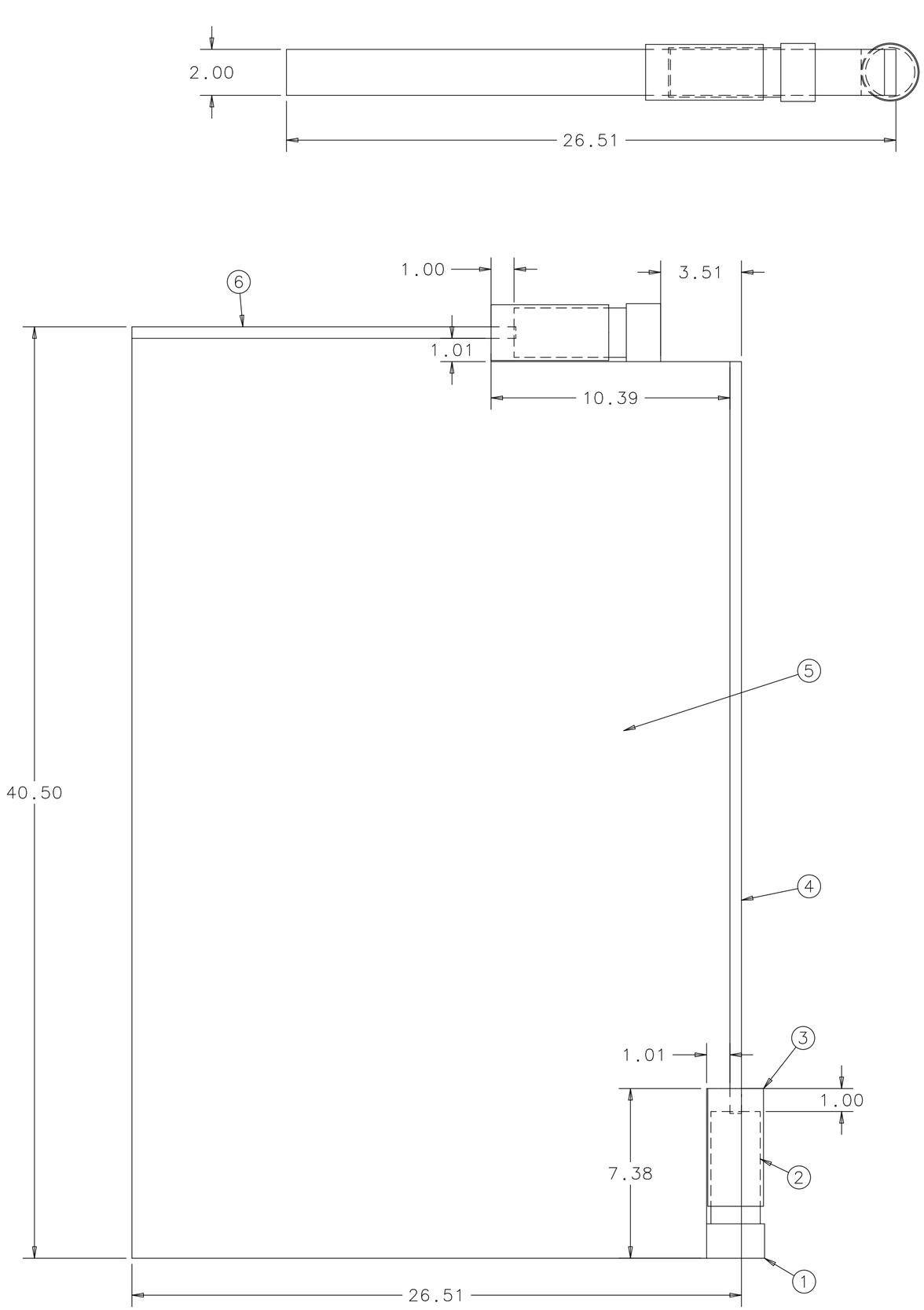

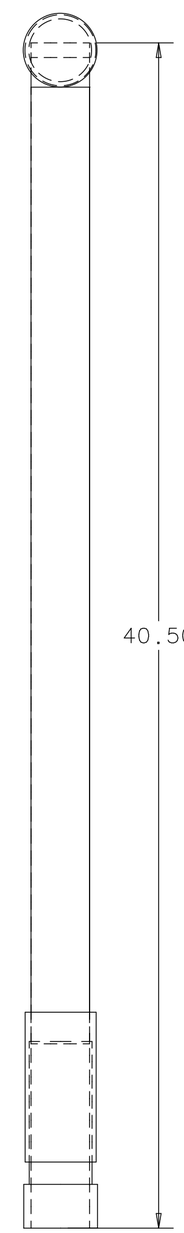

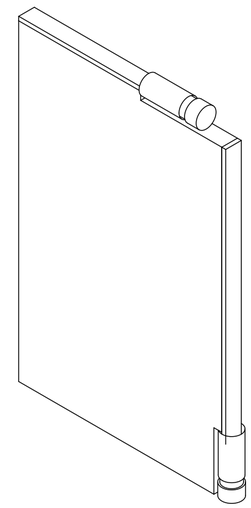

ISOMETRIC VIEW
NOT TO SCALE

ITEM	PART NO.	DESCRIPTION OR SIZE	QTY.
6		16.07 X 2.00 X 0.50 WAVELENGTH SHIFTING BAR	1
5		40.00 X 26.01 X 2.00 PLASTIC SCINTILLATOR WITH TWO KNOTCHES	1
4		32.69 X 2.00 X 0.50 WAVELENGTH SHIFTING BAR	1
3	COML	PMT MAGNETIC SHIELD HAMAMATSU E989-05	2
2	COML	PHOTOMULTIPLIER TUBE HAMAMATSU R550	2
1	COML	D-TYPE SOCKET ASSEMBLY HAMAMATSU E1198-23	2

PARTS LIST

TITLE:	SIDE MUON VETO SHEET	
SCALE:	1:4	
TOLERANCE:	.XX - 0.01	
UNITS:	U.S. INCH	