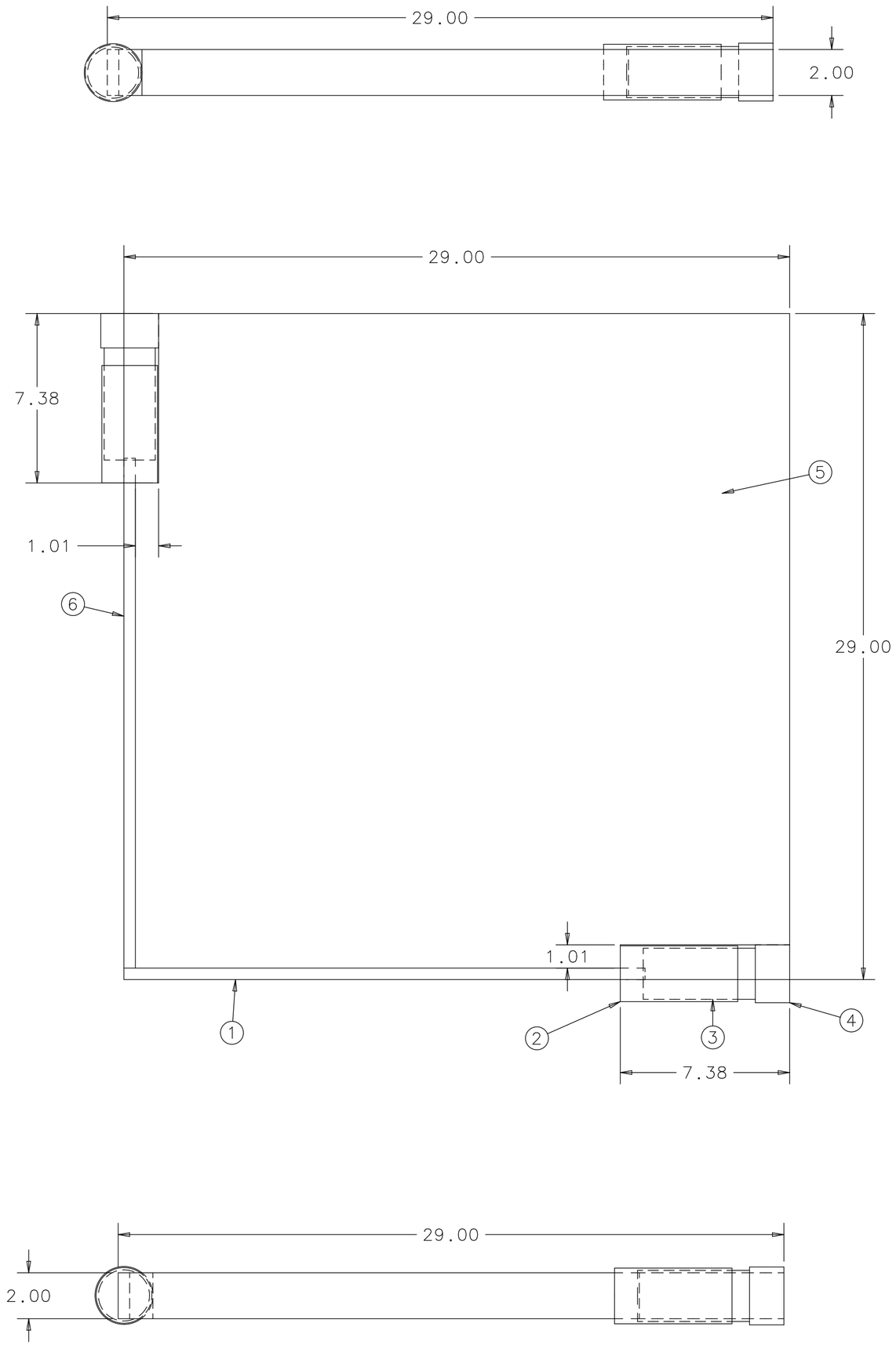

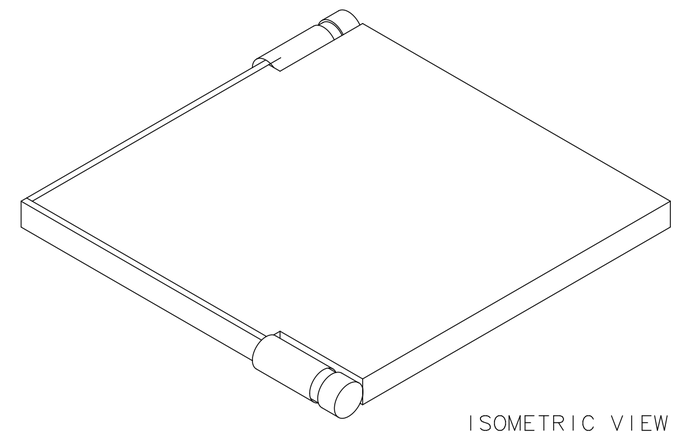

ISOMETRIC VIEW
NOT TO SCALE

ITEM	PART NO.	DESCRIPTION OR SIZE	QTY.
6		22.20 X 2.00 X 0.50 WAVELENGTH SHIFTING BAR	1
5		28.50 X 28.50 X 2.00 PLASTIC SCINTILLATOR WITH TWO NOTCHES	1
4	COML	D-TYPE SOCKET ASSEMBLY HAMAMATSU E1198-23	2
3	COML	PMT HAMAMATSU R550	2
2	COML	PMT MAGNETIC SHIELD HAMAMATSU E989-05	2
1		22.70 X 2.00 X 0.50 WAVELENGTH SHIFTING BAR	1

PARTS LIST

TITLE:	TOP MUON VETO SHEET	
SCALE:	1:4	
TOLERANCE:	.XX - 0.01	
UNITS:	U.S. INCH	